SUMMER -

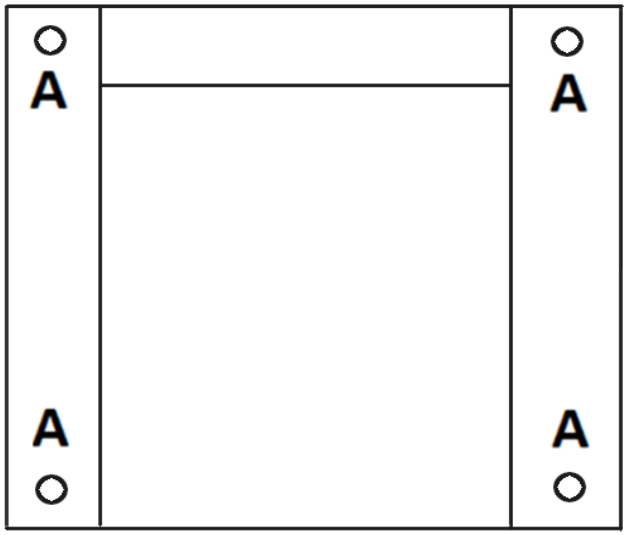

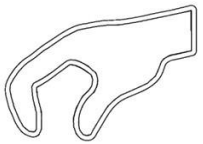

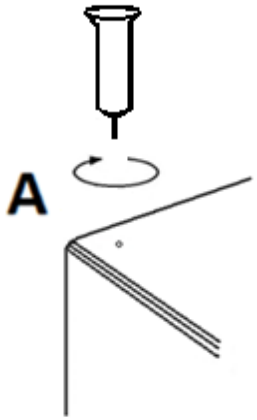

A x 4

SUMMER -

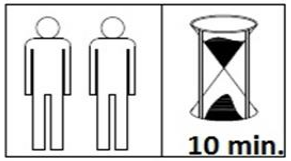

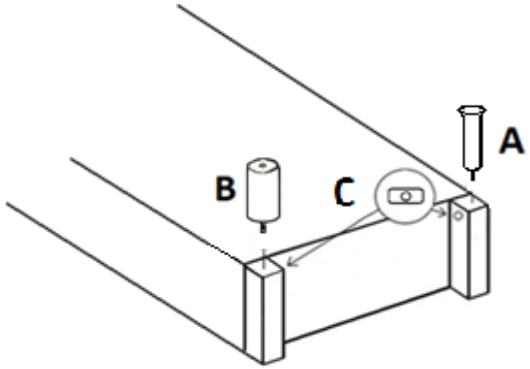

A x 2

B x 2
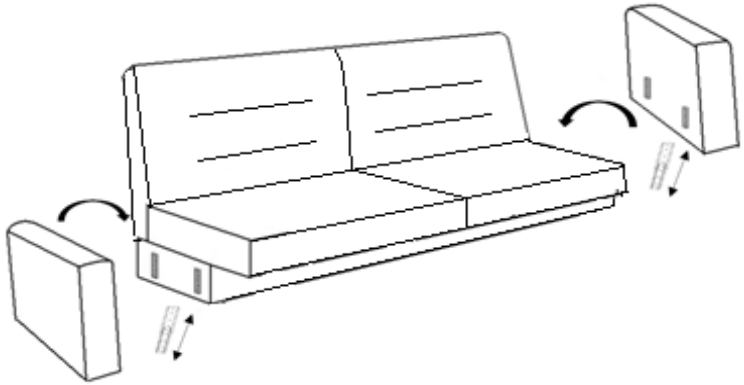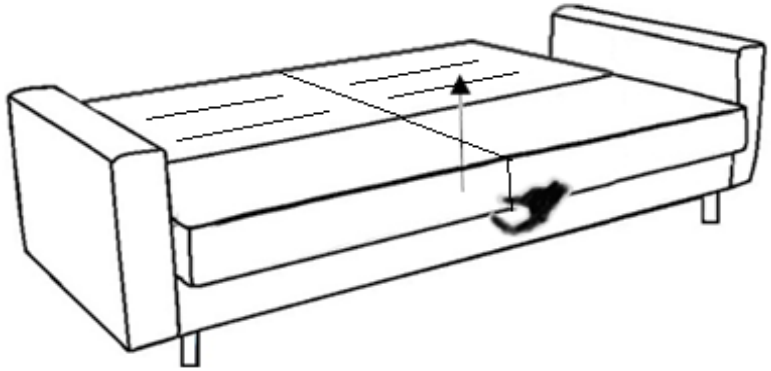
C x 4