NÁVOD NA MONTÁŽ - KA-H104

(1)x1

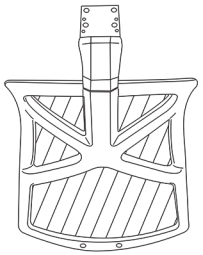

(6)x5

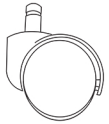

(2)x1

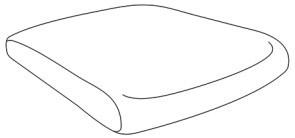

(7)x1

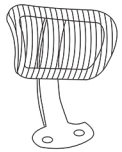

(7A)x1

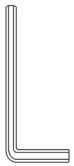

4#

(3)x1 (L+R)

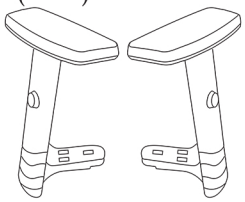

(8)x1

(8A)x1

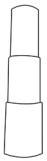

(4)x1

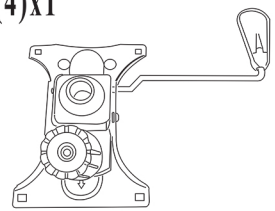

(9)x4

1/4X3/4'

(9A)x2

1/4X7/8'

(5)x1

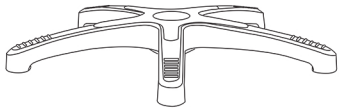

(10)x10

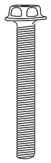

1/4X1-1/4'

1

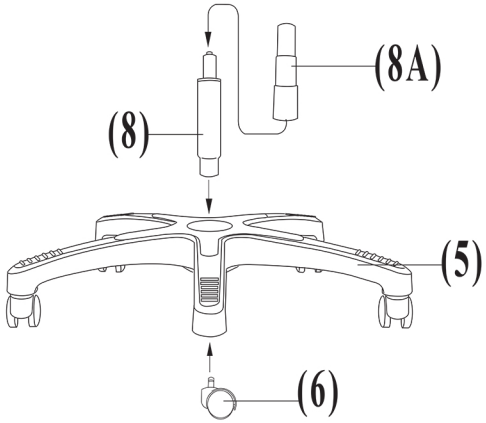

2

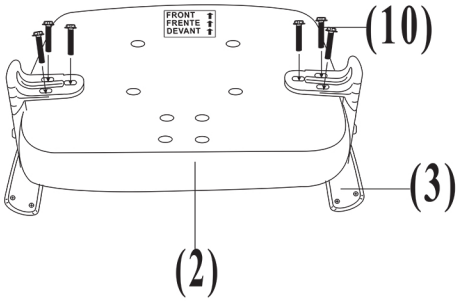

3

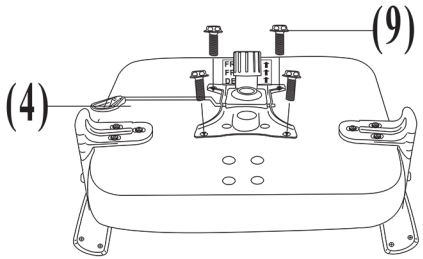

4

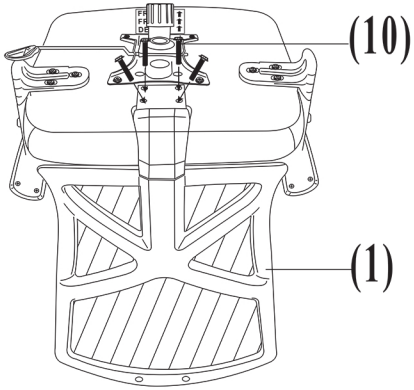

5

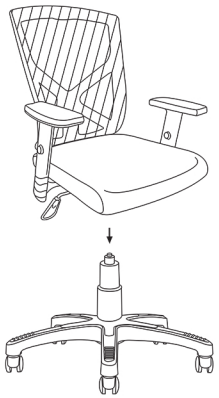

6
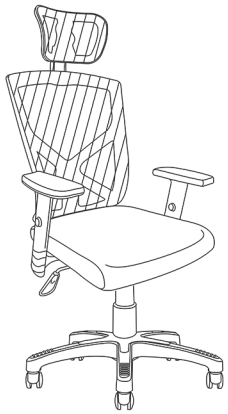
7