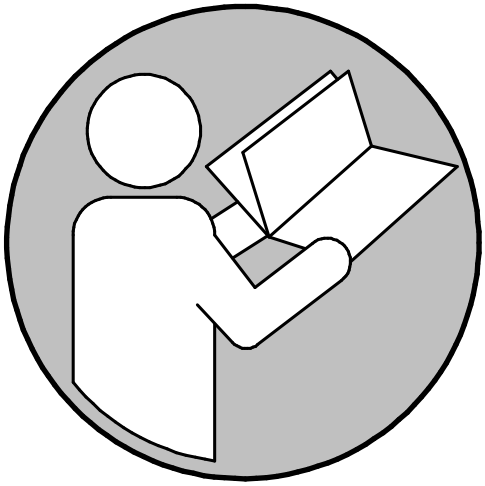

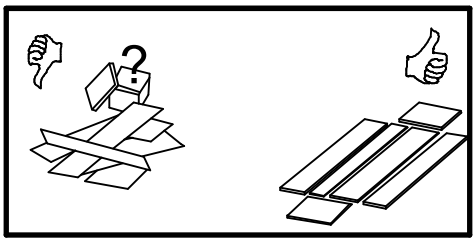

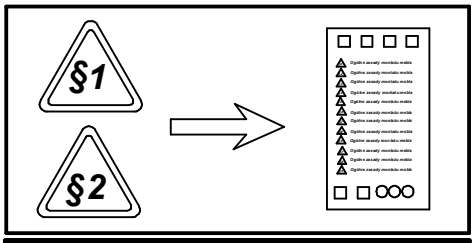

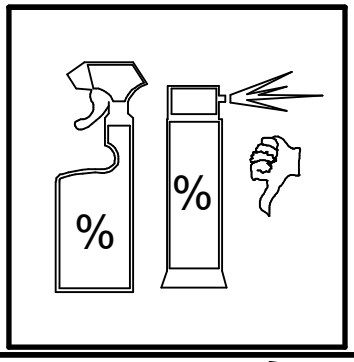

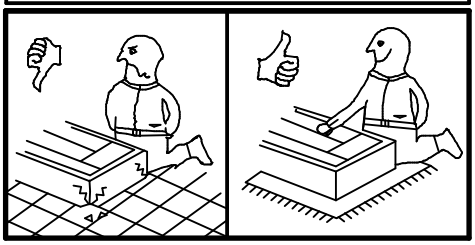

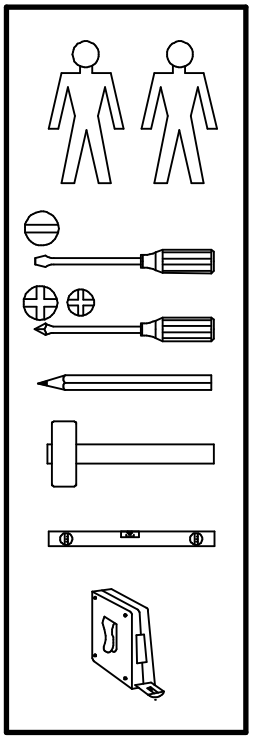

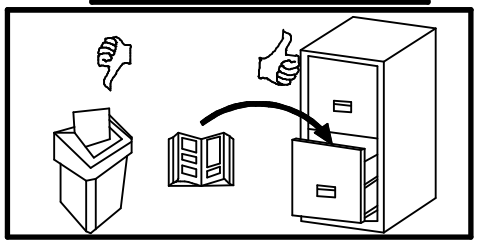

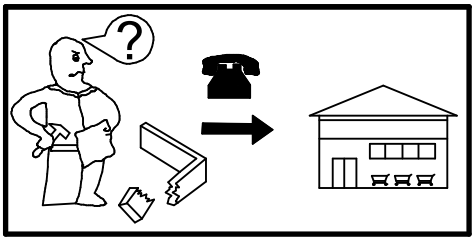

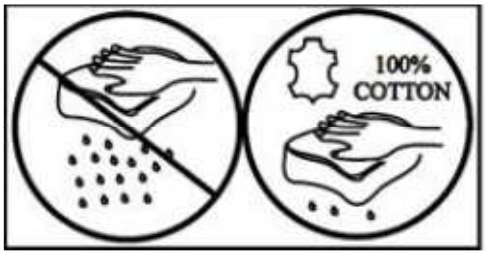

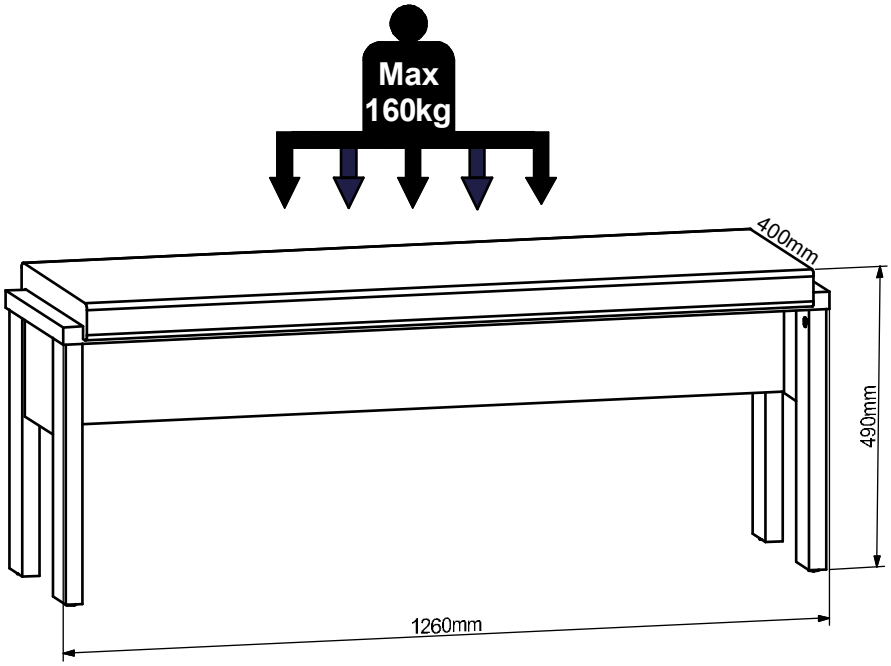

P28-S533-LAK_5_13-M_IN16-A-KOR01.dwg

A	B	C1	C2	C3	D
1	S214-535	1195	400	60	1/1
2	S533-2022	1260	350	28	1/1
3	S533-4001	1198	160	22	1/1
4	S533-7101	420	346	28	1/1

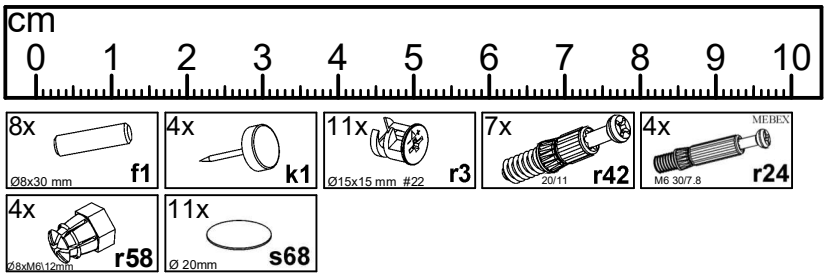

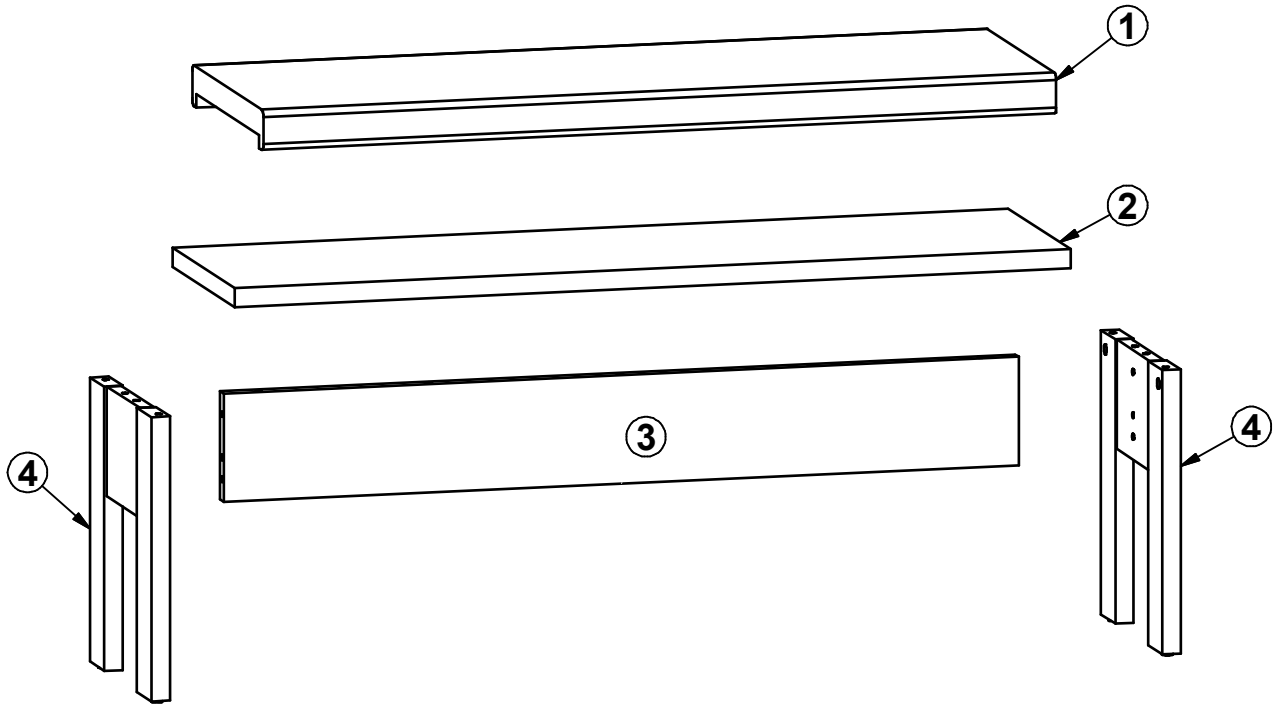

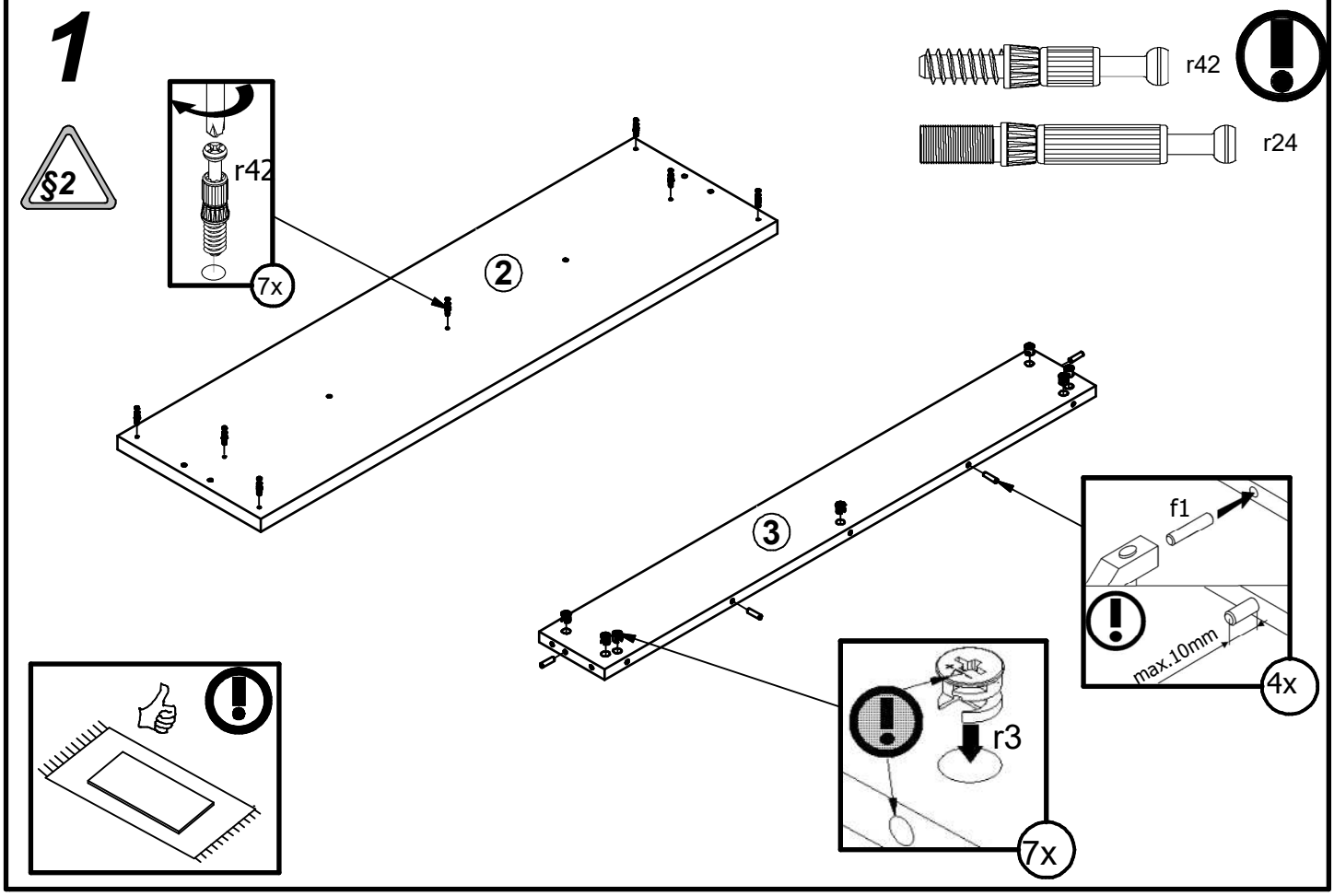

2

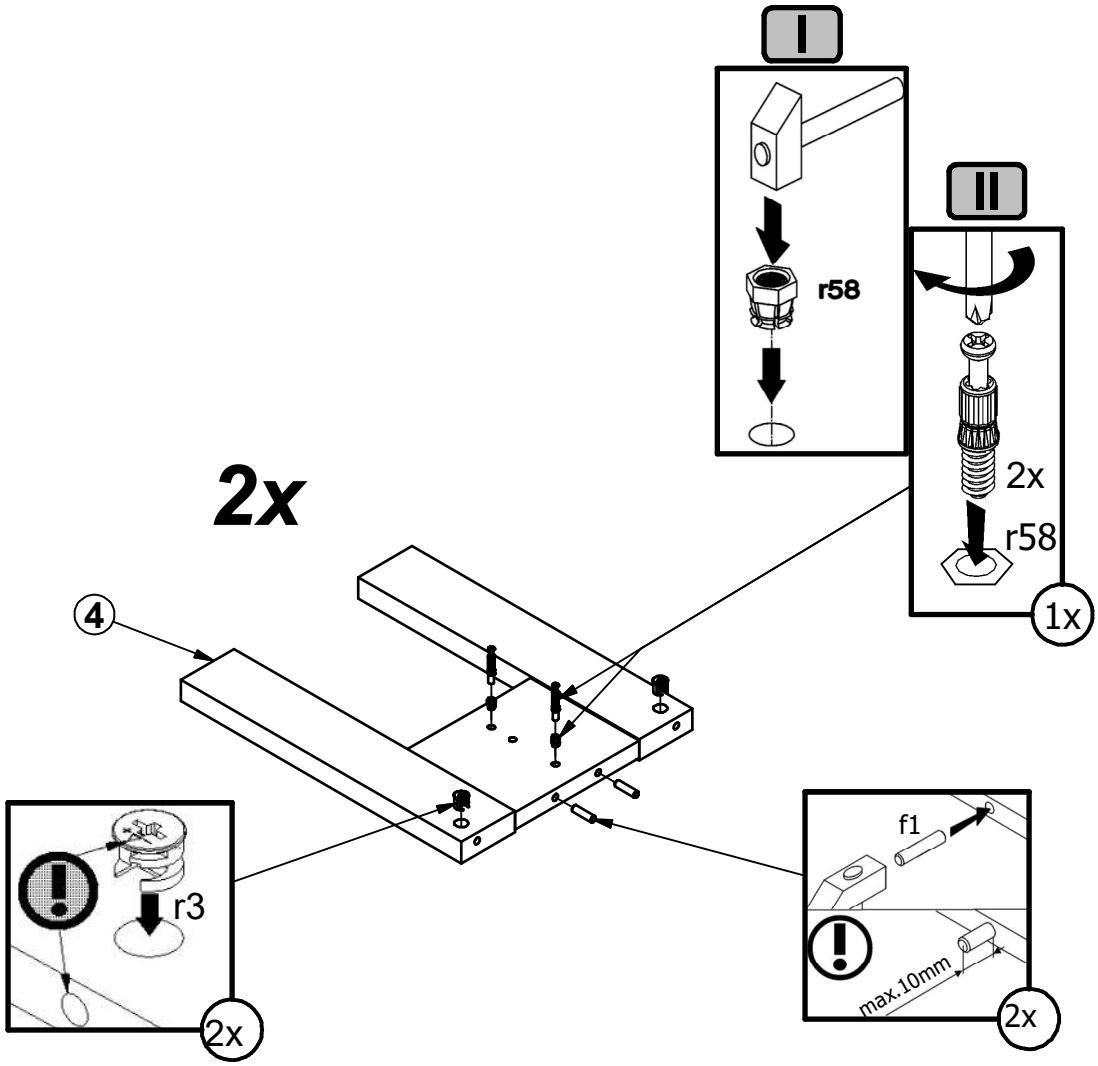

3

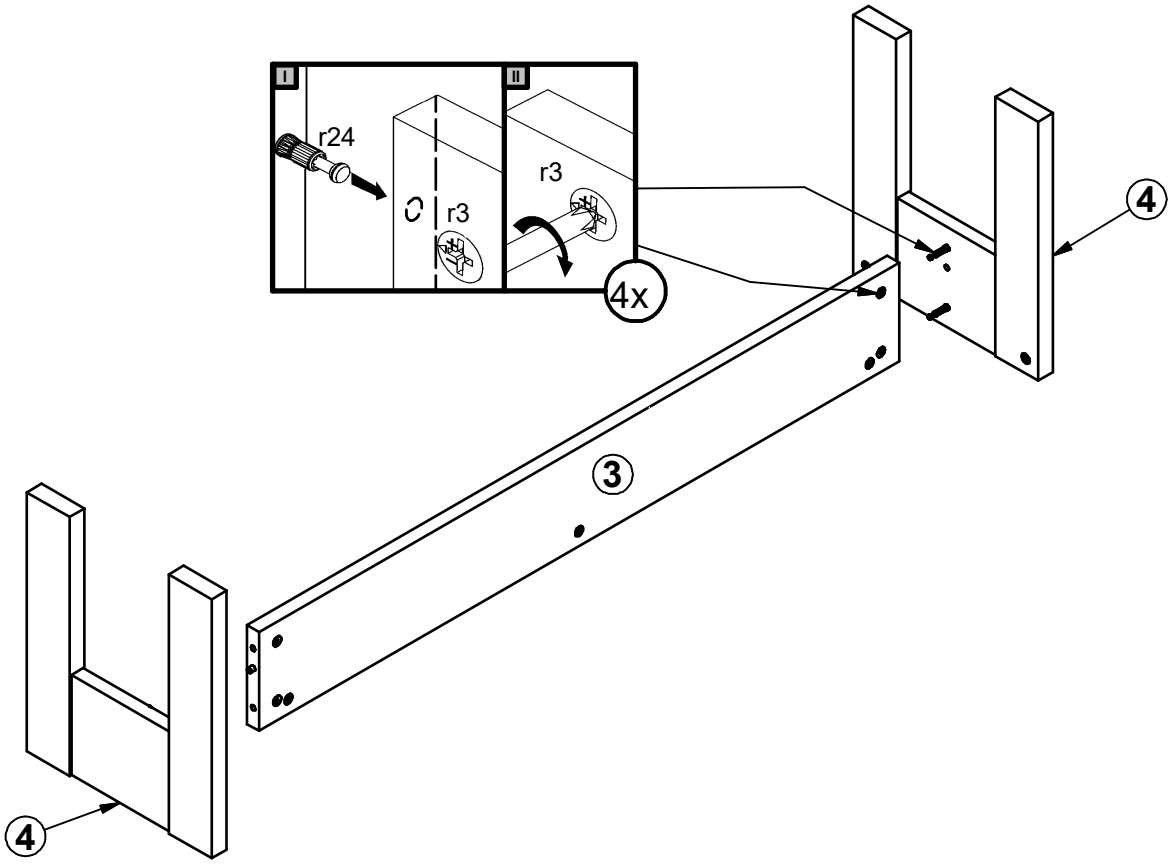

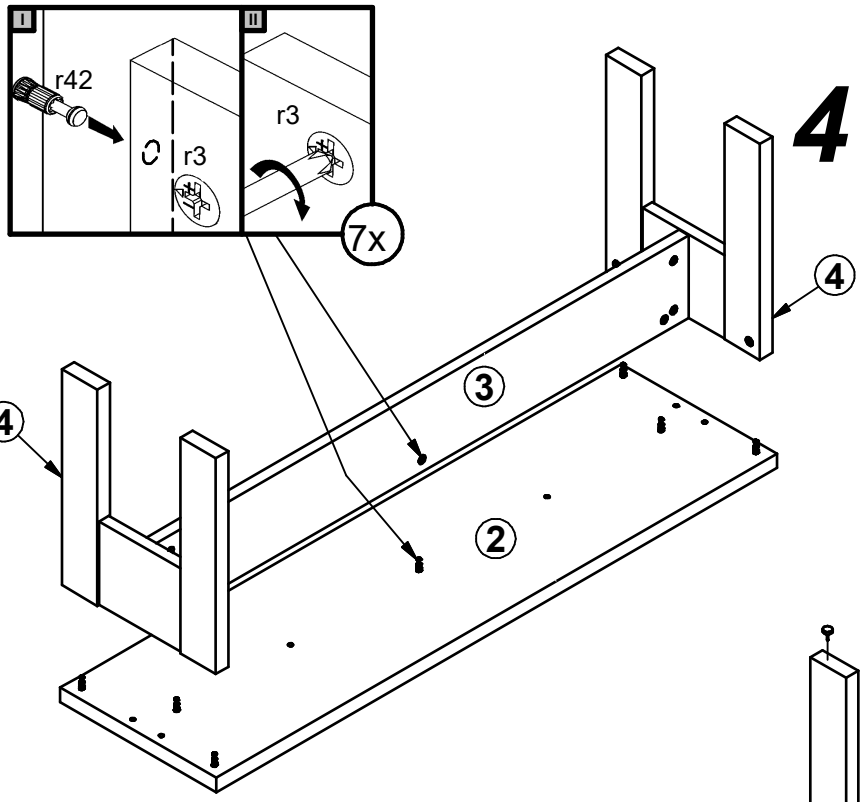
I
II
r42
r3
r3
7x
4
4
3
4
2

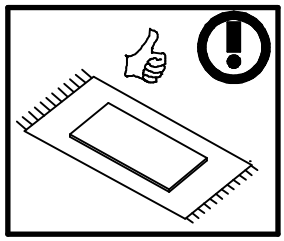

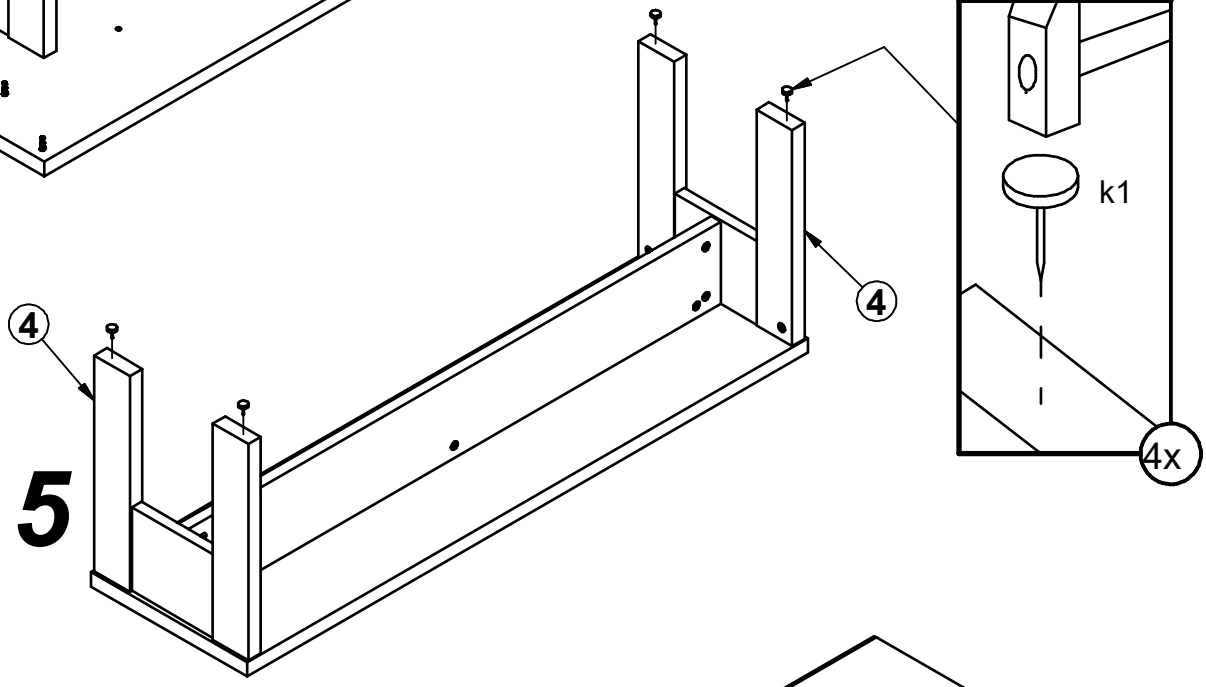
k1
4x
4
4
5

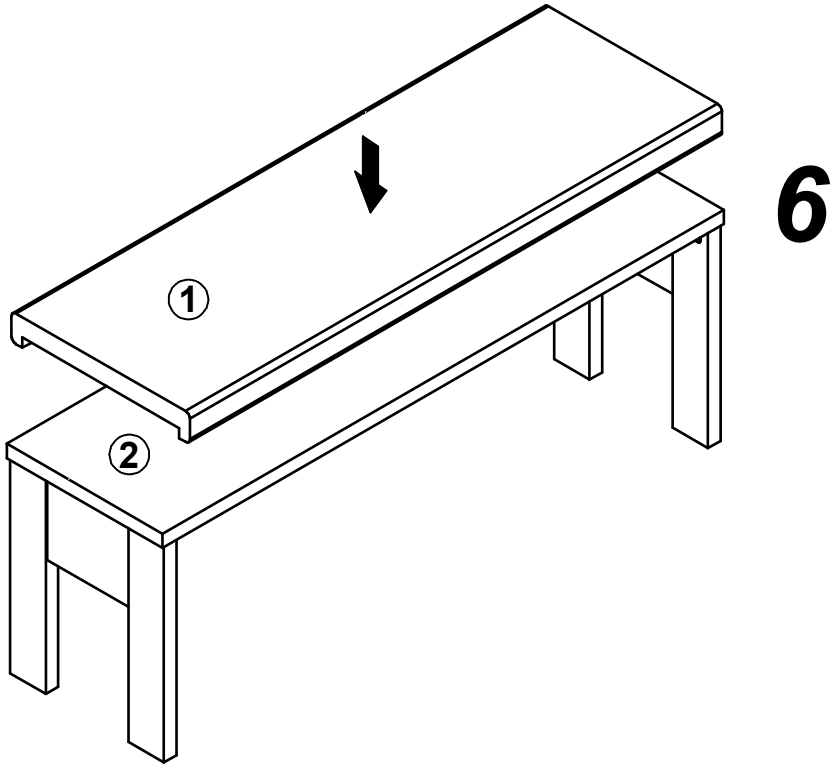
6
1
2