SR2655K56104

MIX
Wood from responsible sources
FSC® C011298

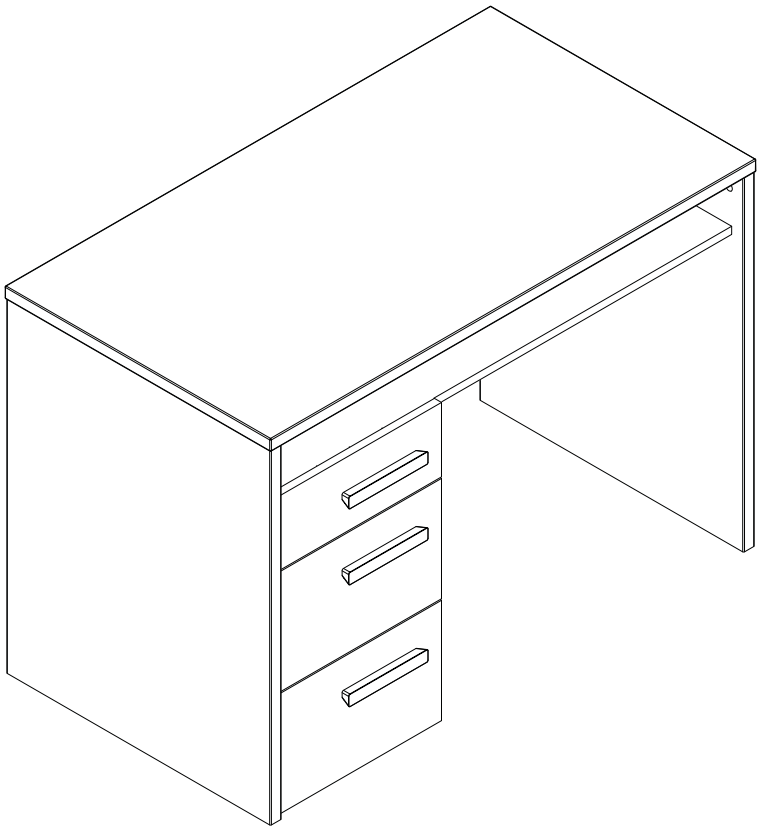

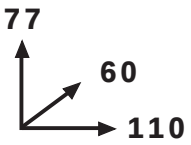

QF4450

composad
GRUPPO MAURO SAVIOLA
The Eco-Ethical Company

GUARANTEED ECOLOGICAL PANEL 100% RECYCLED WOOD

MADE IN ITALY

Produced by COMPOSAD srl, Via Lombardia 29, 46019 Viadana (MN) ITALY

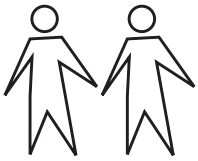

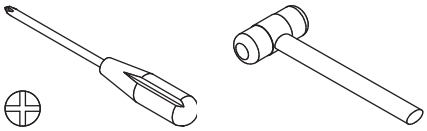

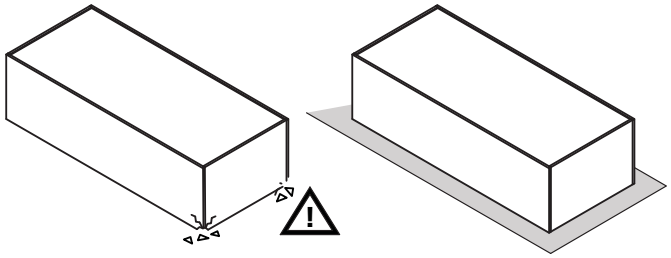

BU3624

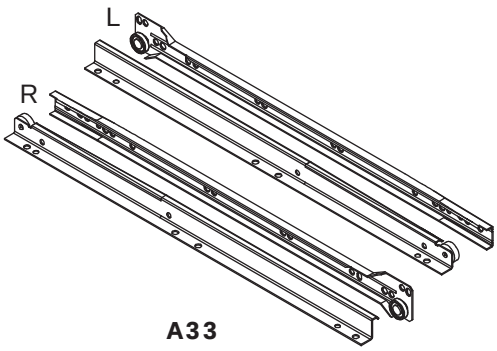

A33
x3

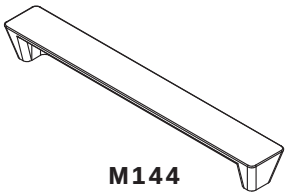

M144
x3

BU3603

V32
x6

V5
x18

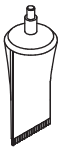

H14
x1

V13
x12

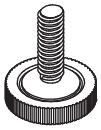

P34
x6

T94
x6

T28
x23

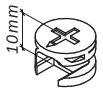

T98
x6

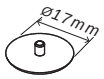

G128
x6

H2
x6

H113
x6

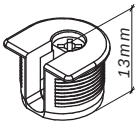

T116
x6

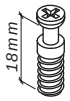

T69
x6

T7
x11

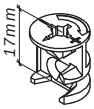

T92
x6

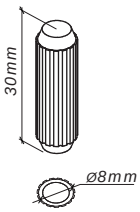

H1
x17

G67
x6

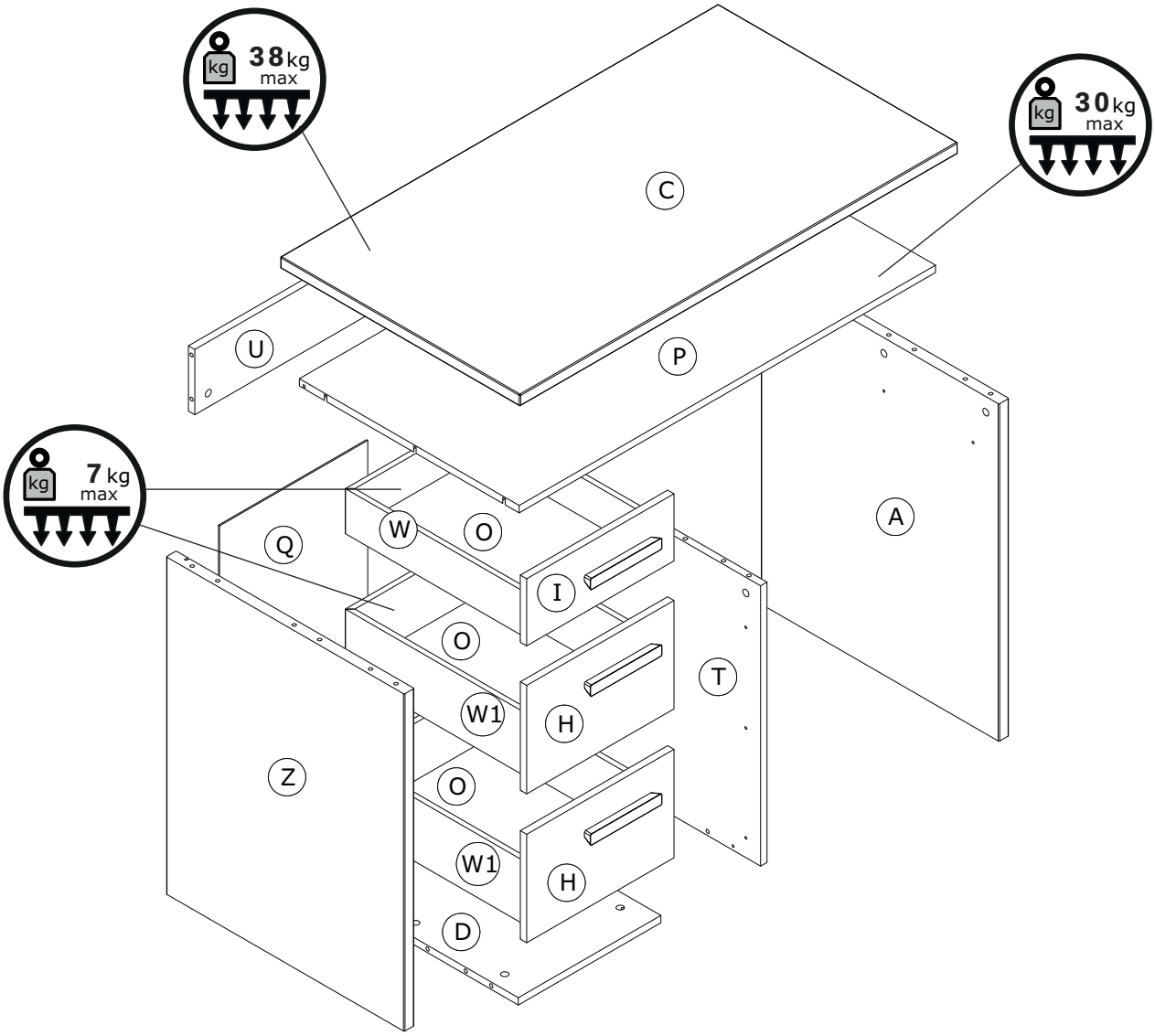

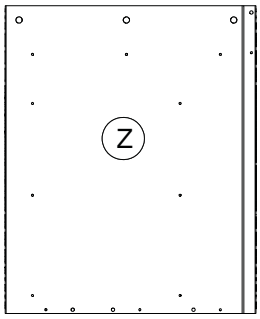

FI7804
734x598x25mm

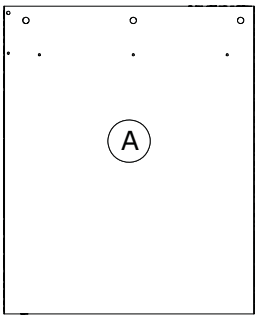

FI7803
734x598x25mm

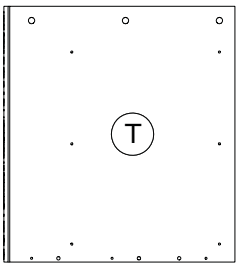

TR1953
610x551x16mm

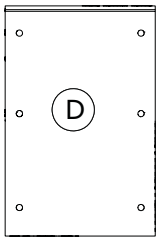

BA1949
358x549x16mm

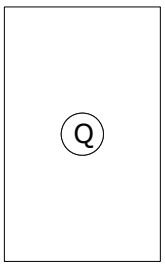

SH2968
607x372x3mm

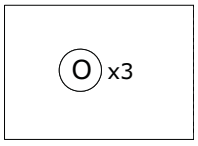

SH2969
451x320x3mm

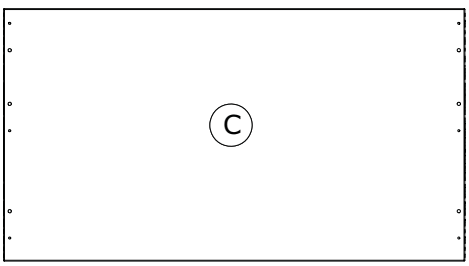

CA3207
1100x602x25mm

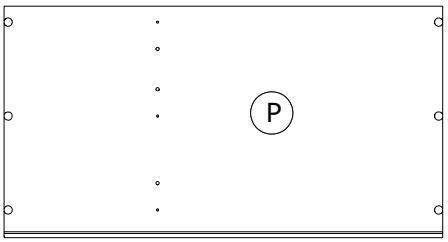

PI6709
1046x552x16mm

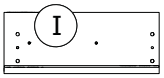

CS2790
730x146x16mm

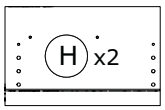

CS2788
370x236x16mm

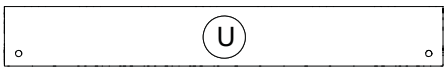

FS2885
1046x142x16mm

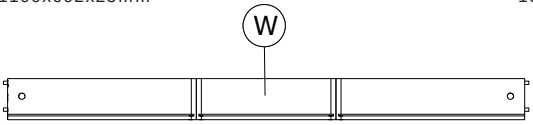

OS0403
450x333x450mm H.98mm

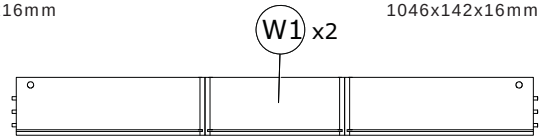

OS0404
450x333x450mm H.138mm

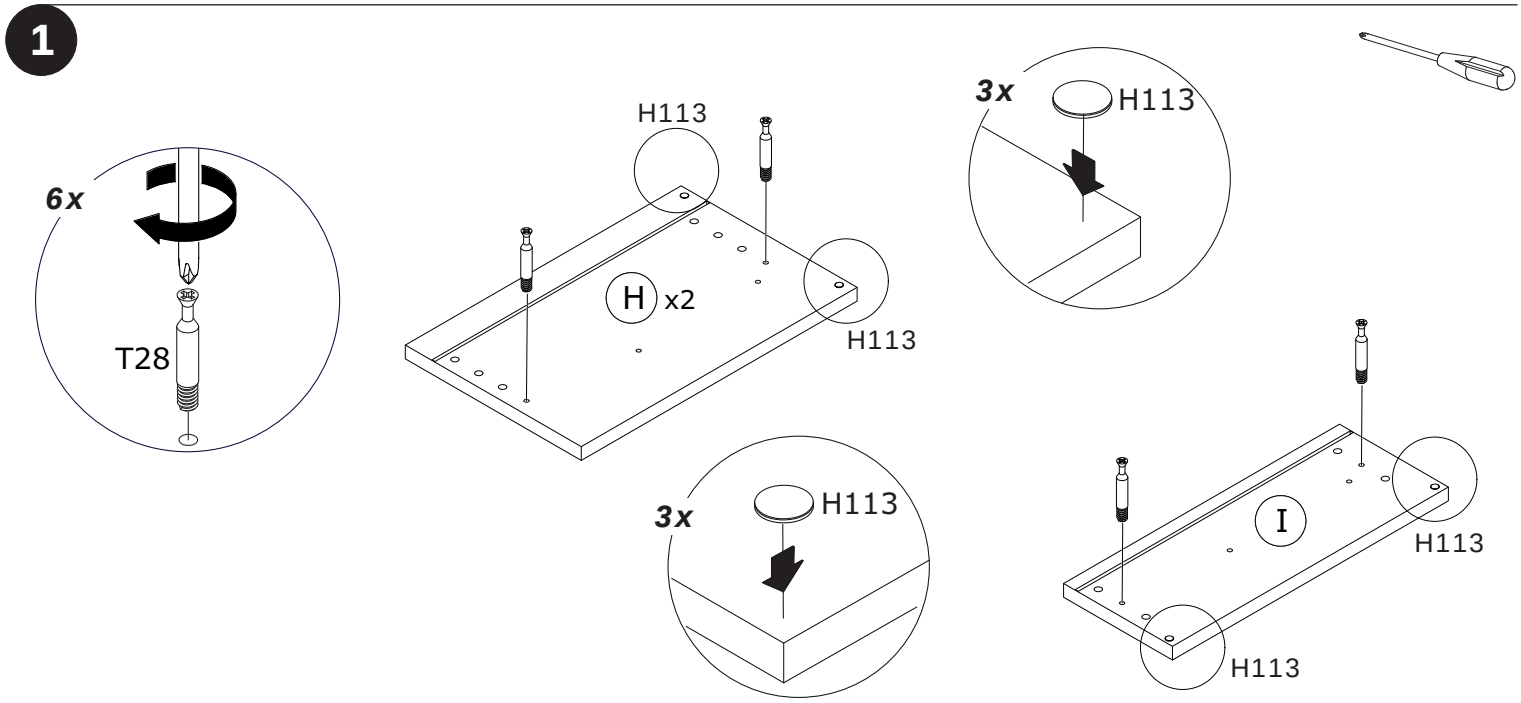
1
6x
T28
H113
H x2
H113
3x
H113
3x
H113
I
H113
H113

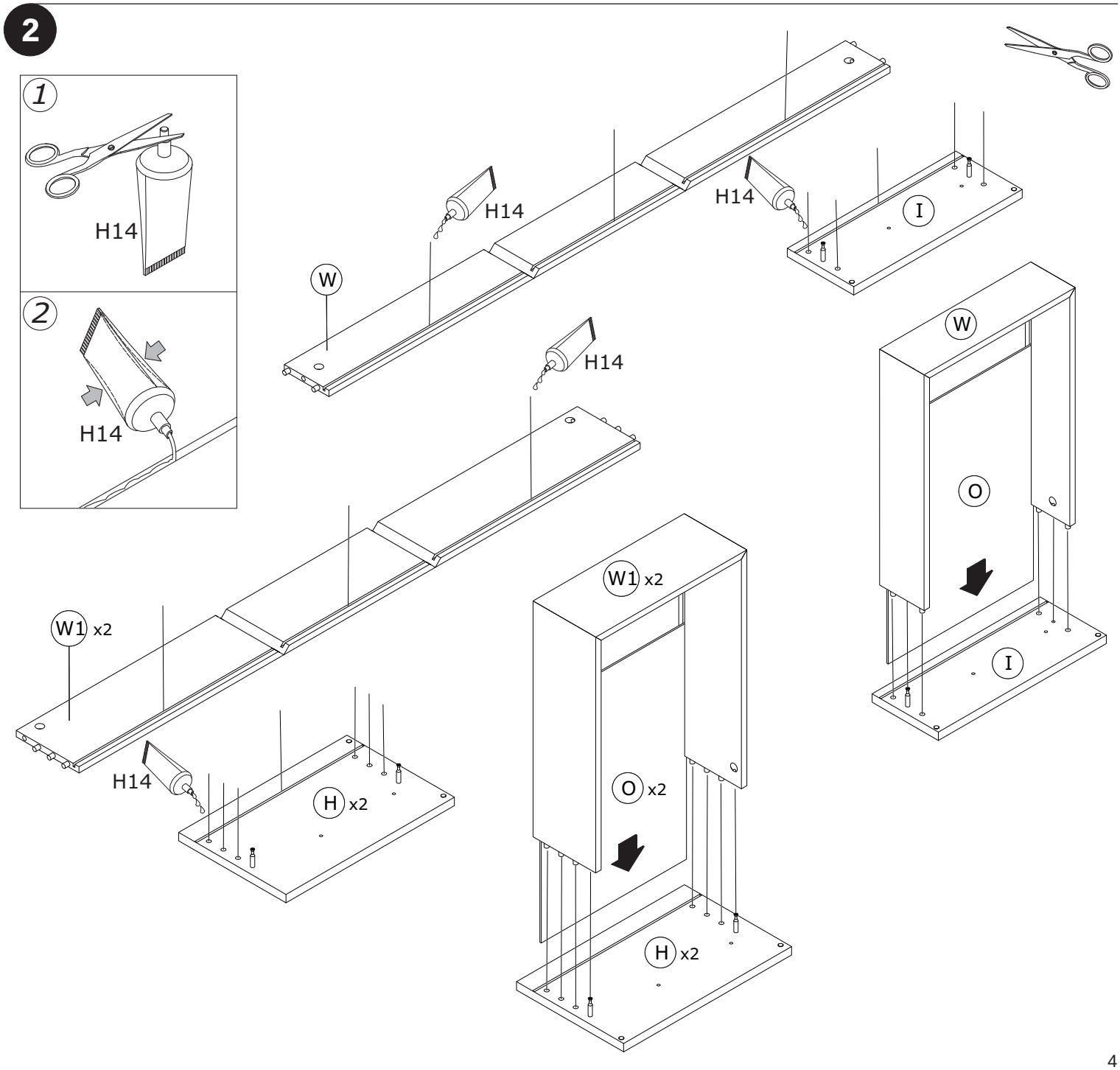
2
1
H14
2
H14
H14
H14
W
I
H14
W
O
I
W1 x2
H14
H x2
W1 x2
O x2
H x2

3

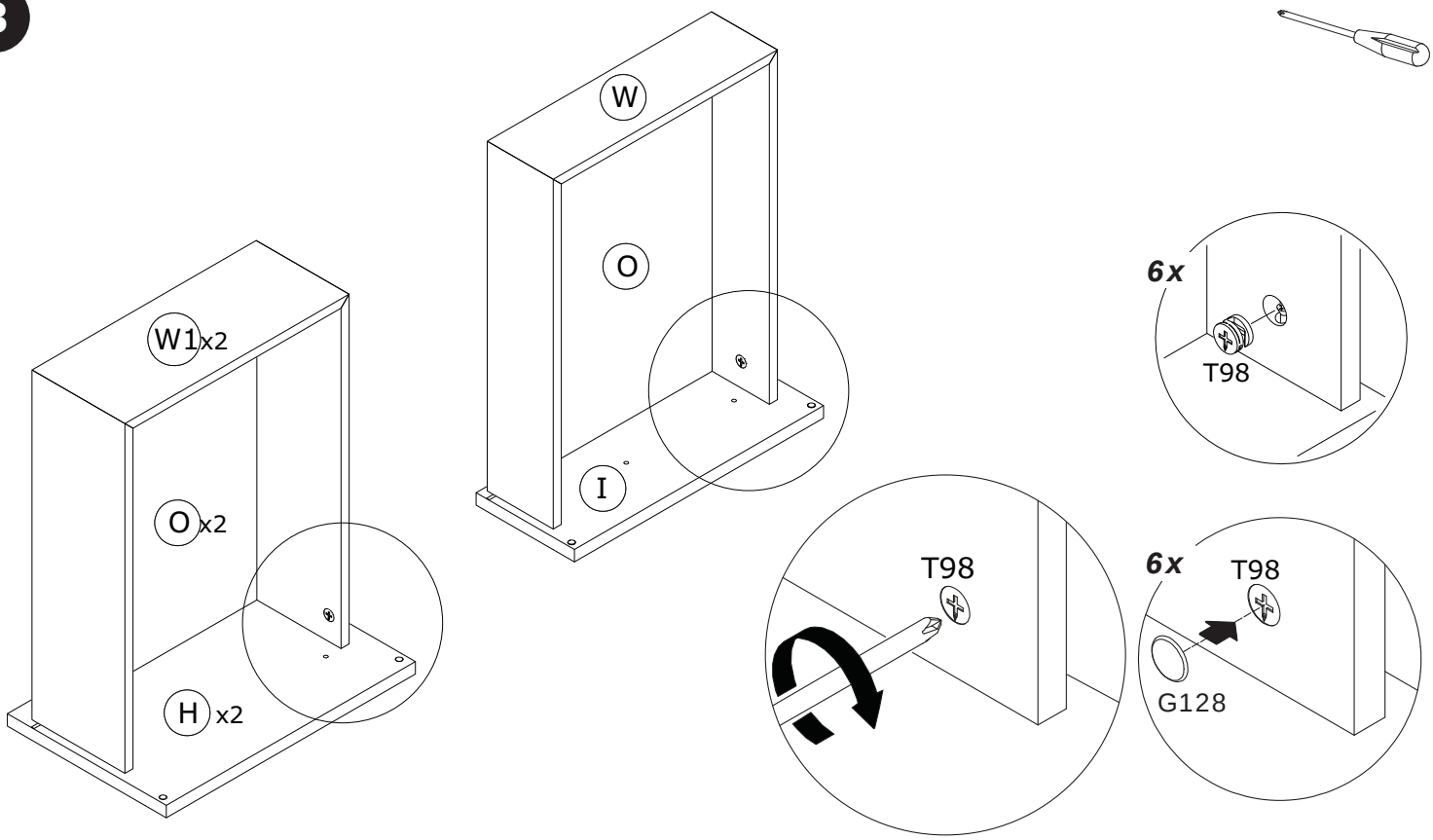
W
O
I
W1 x2
O x2
H x2
6x
T98
T98
6x
T98
G128

4

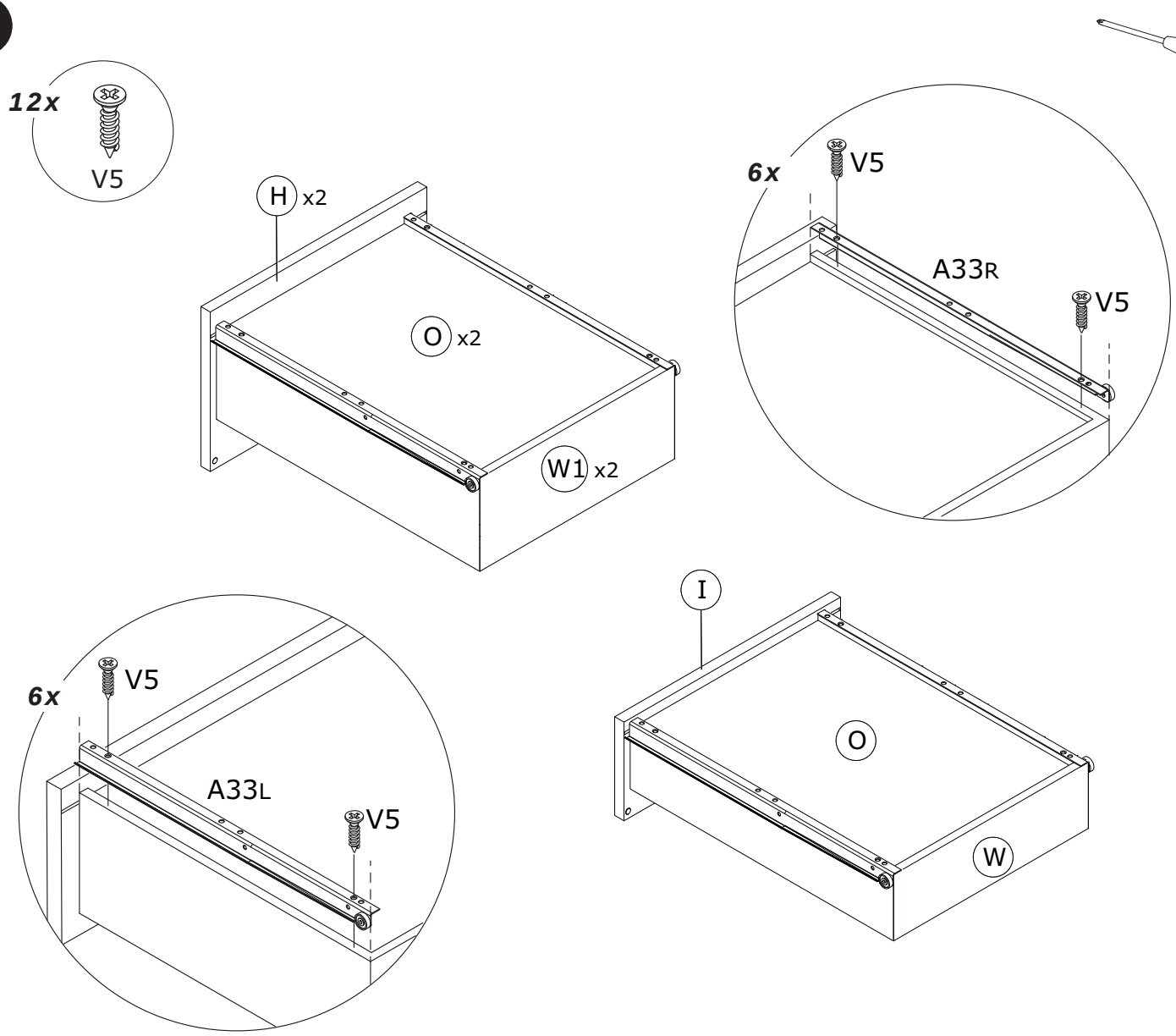
12x
V5
H x2
O x2
W1 x2
6x
V5
A33R
V5
6x
V5
A33L
V5
I
O
W

5

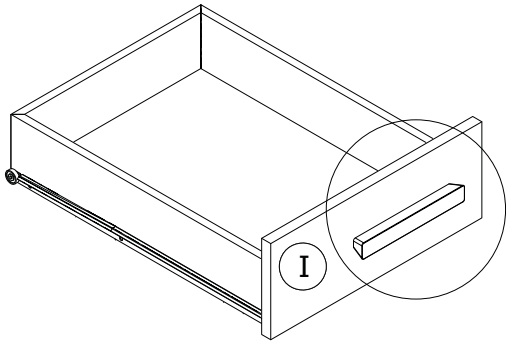

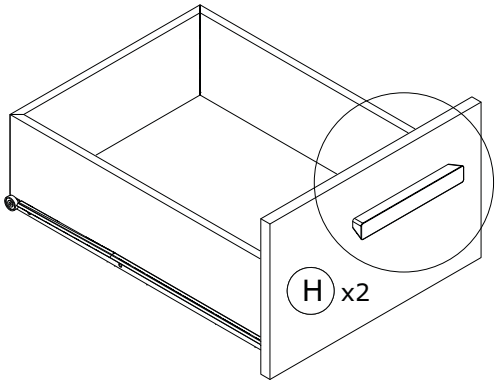

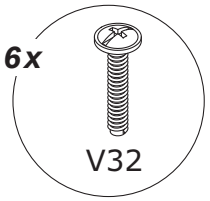

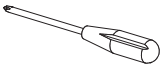

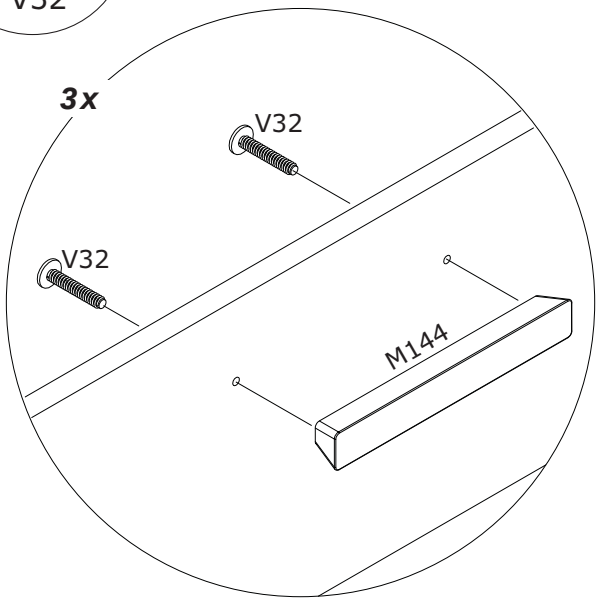

6

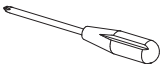

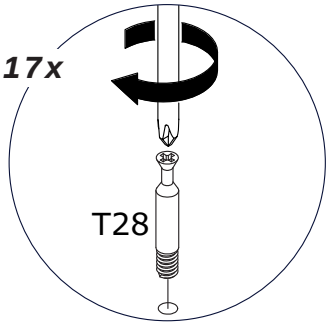

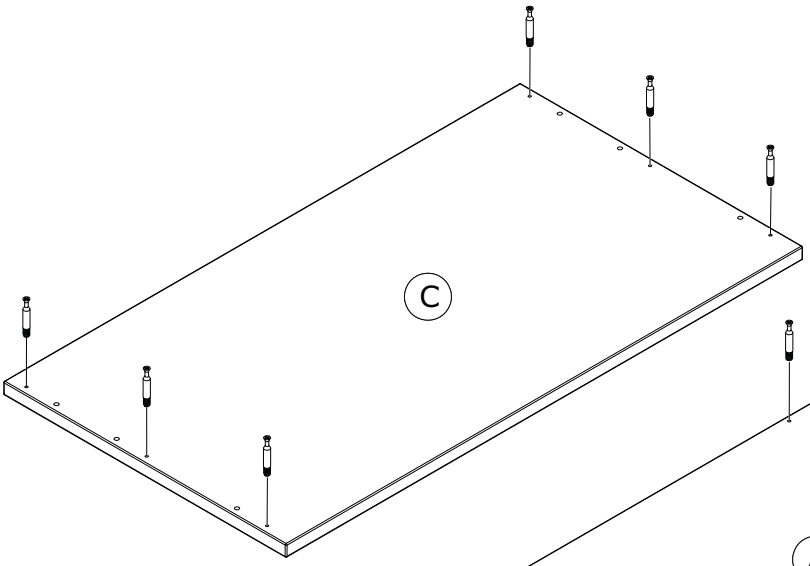

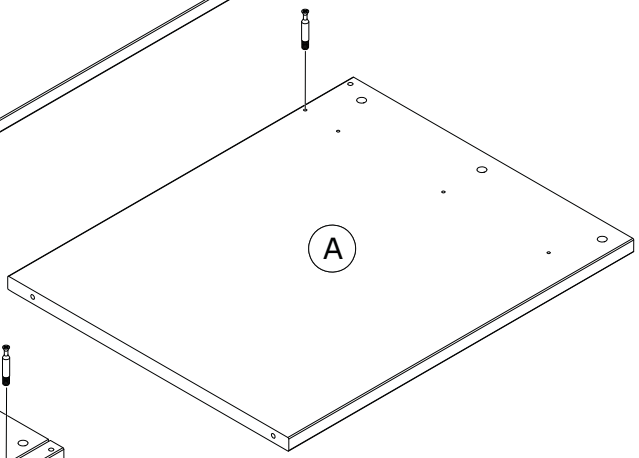

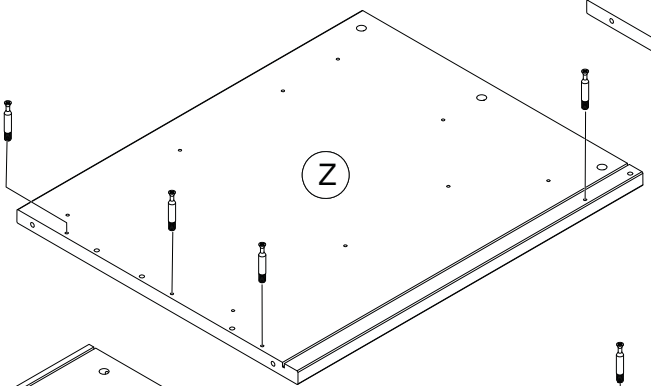

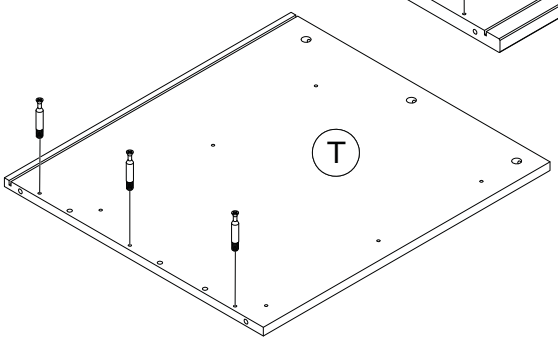

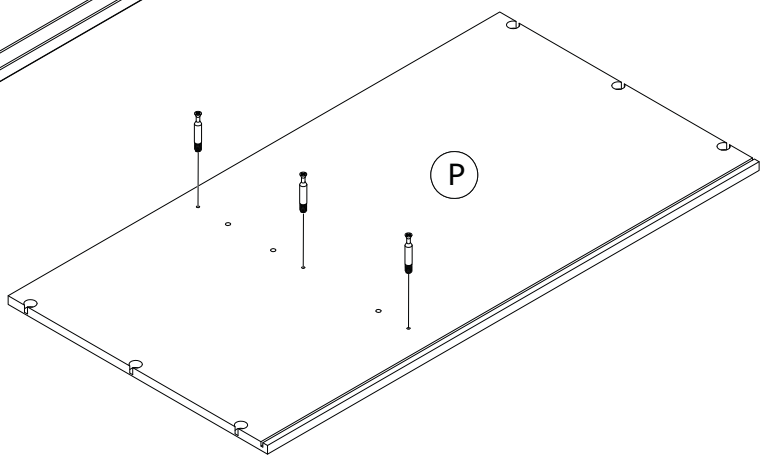

7

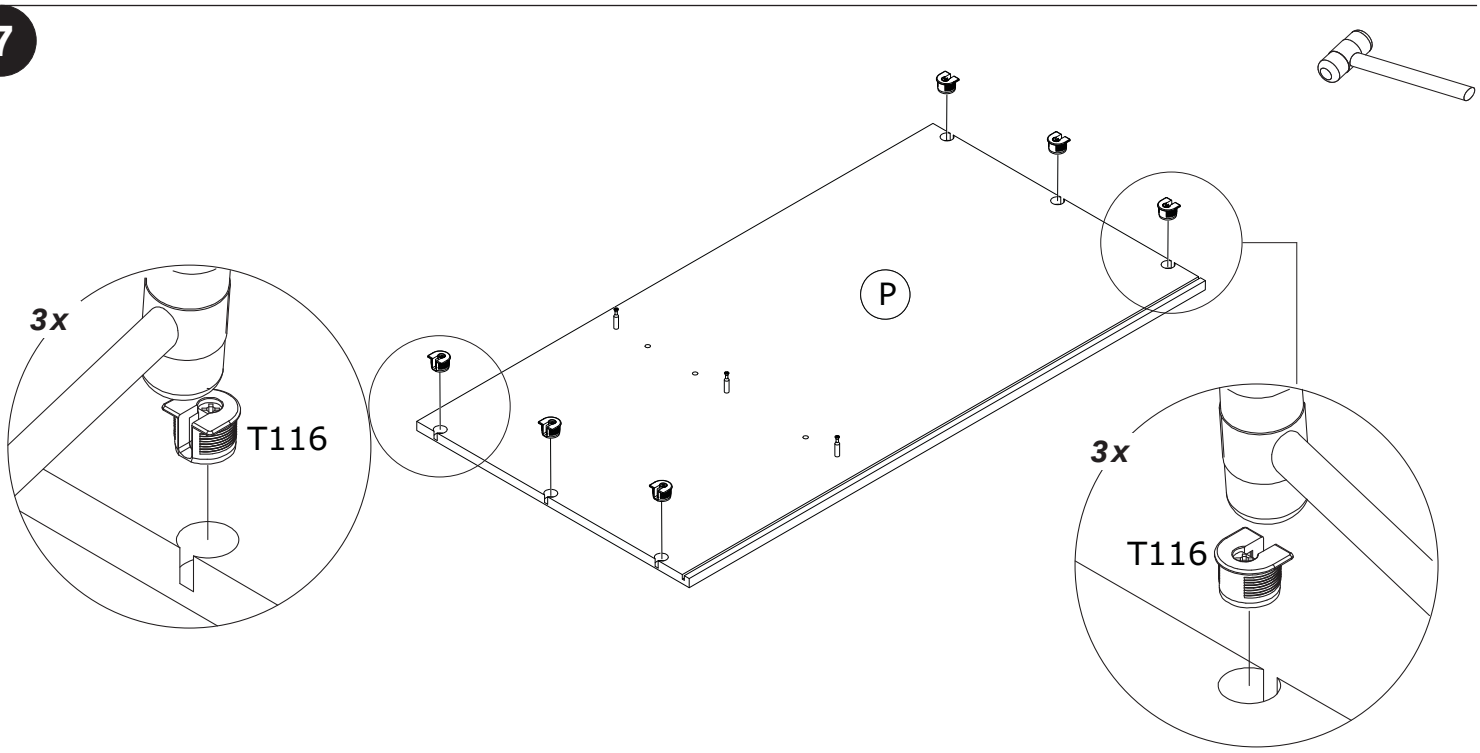
3x
T116
P
3x
T116

8

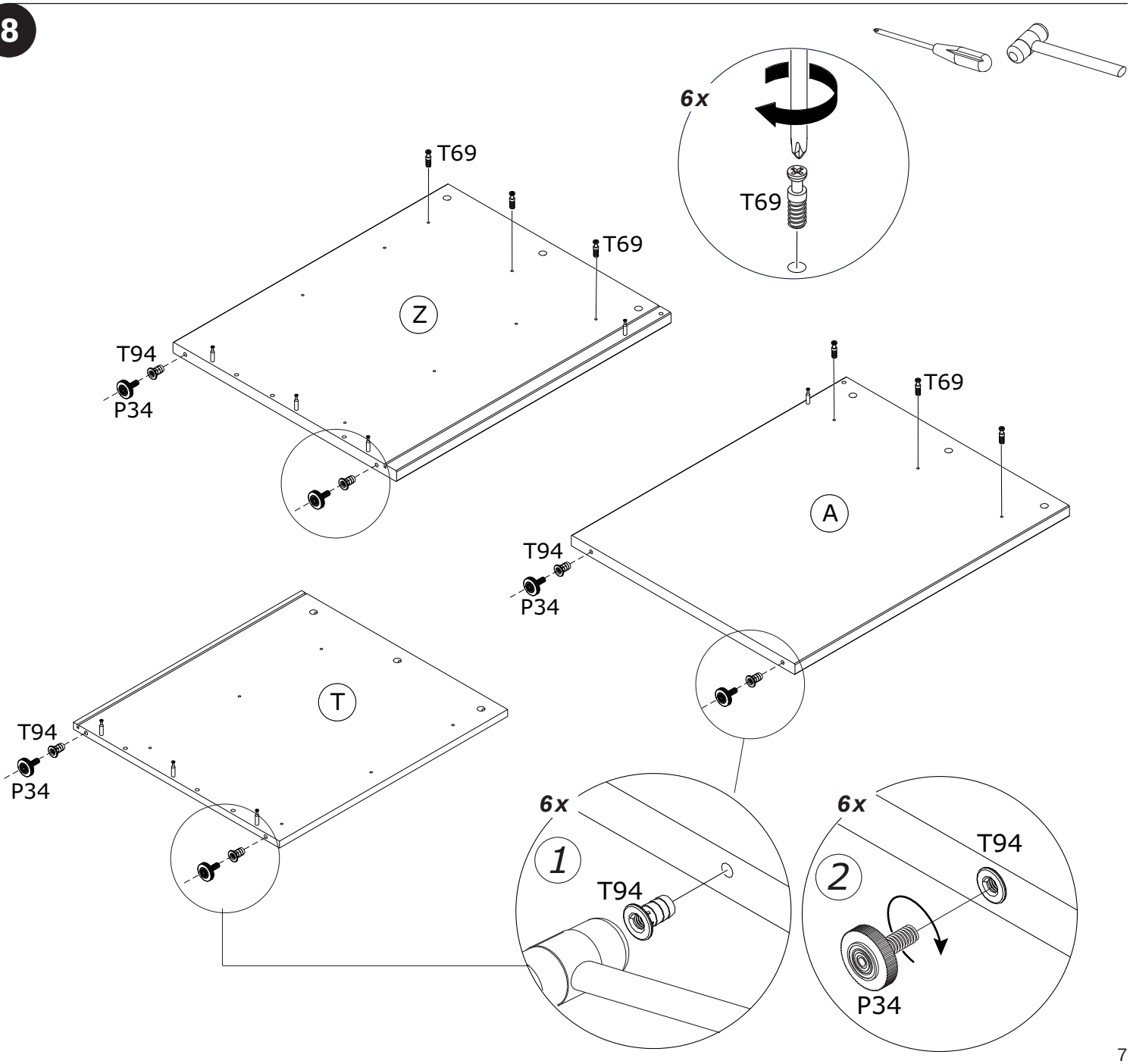
6x
T69
T69
T69
Z
T94
P34
T69
A
T94
P34
T
T94
P34
6x
1
T94
6x
2
T94
P34

9

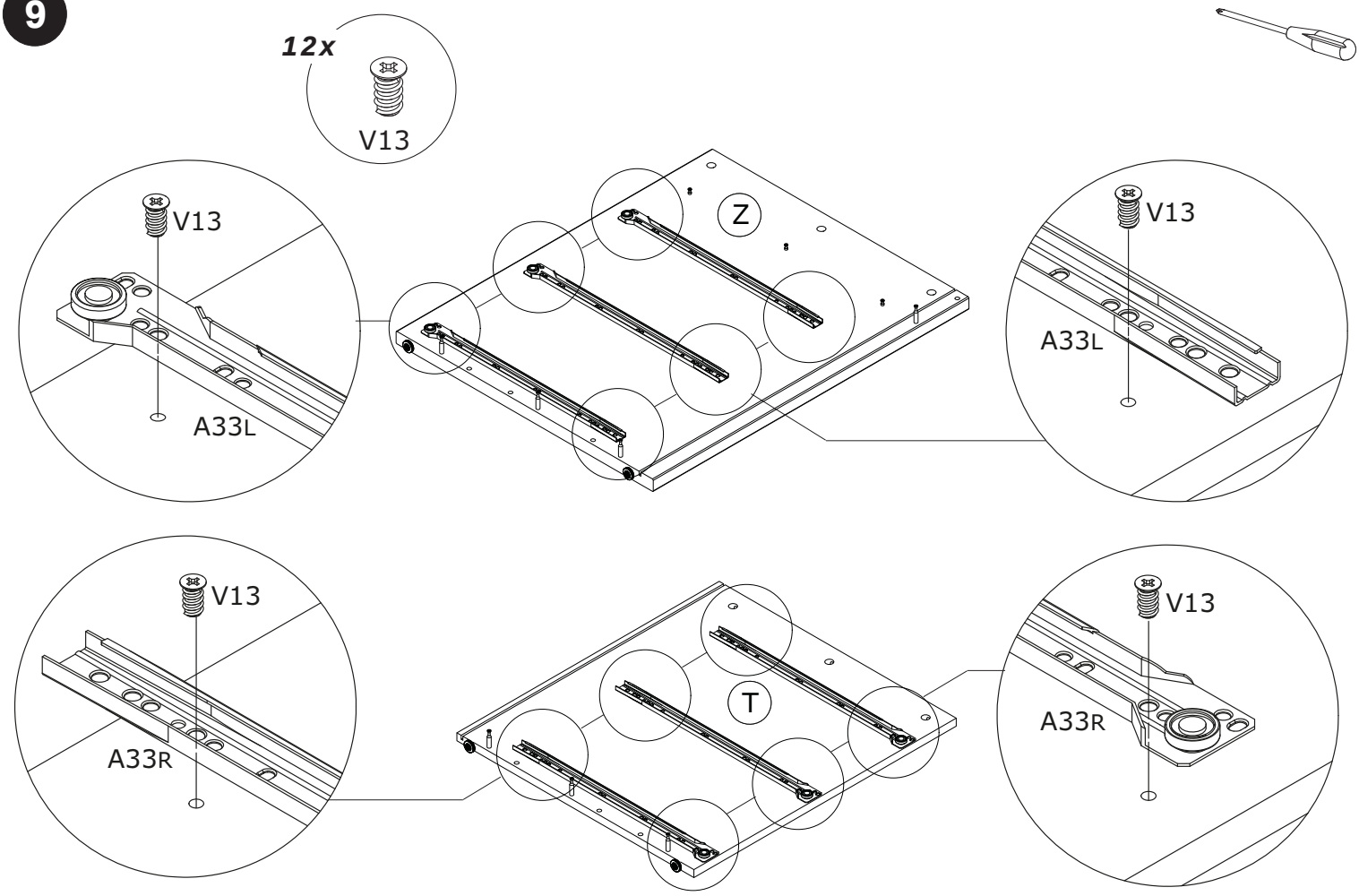

10

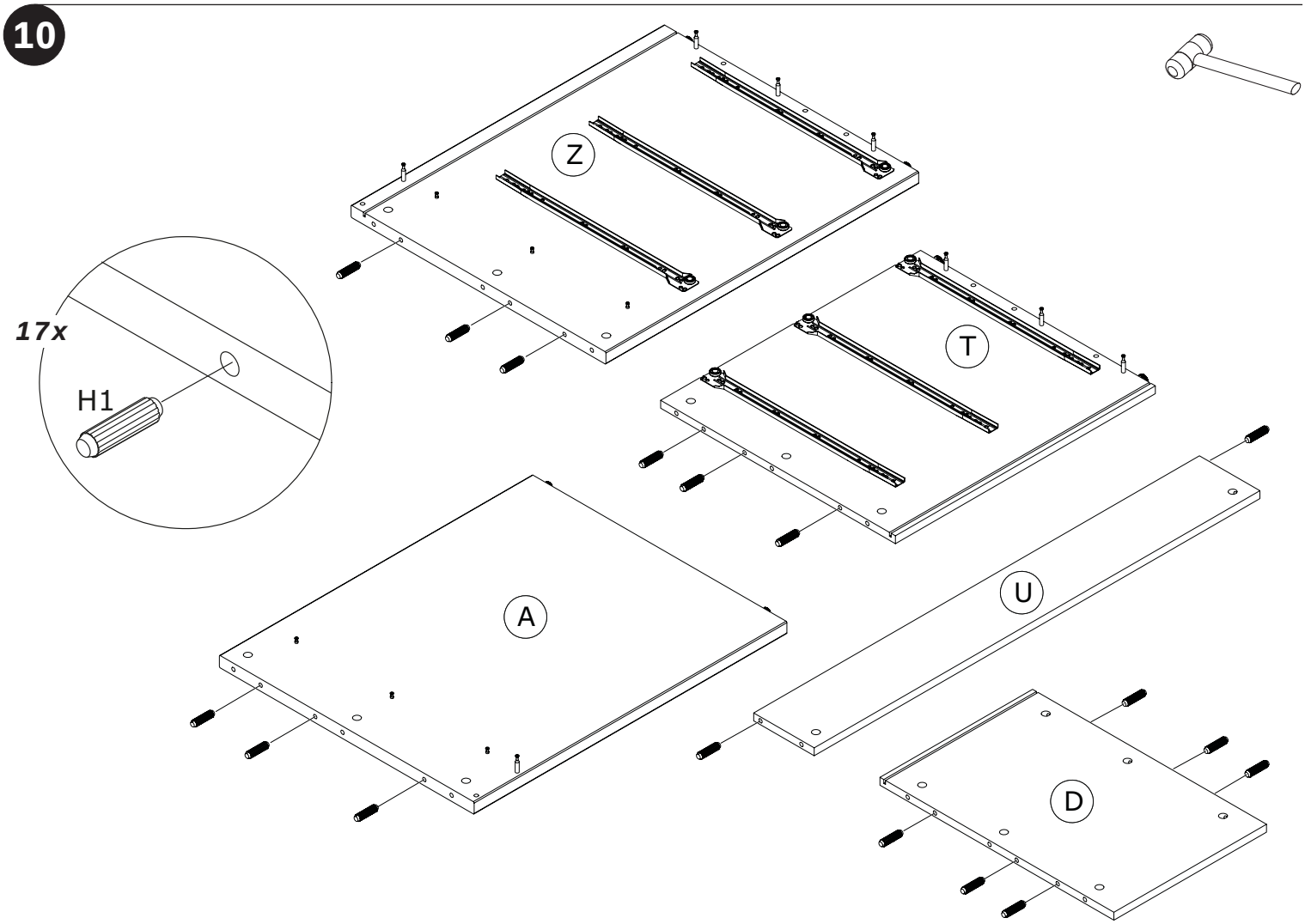

11

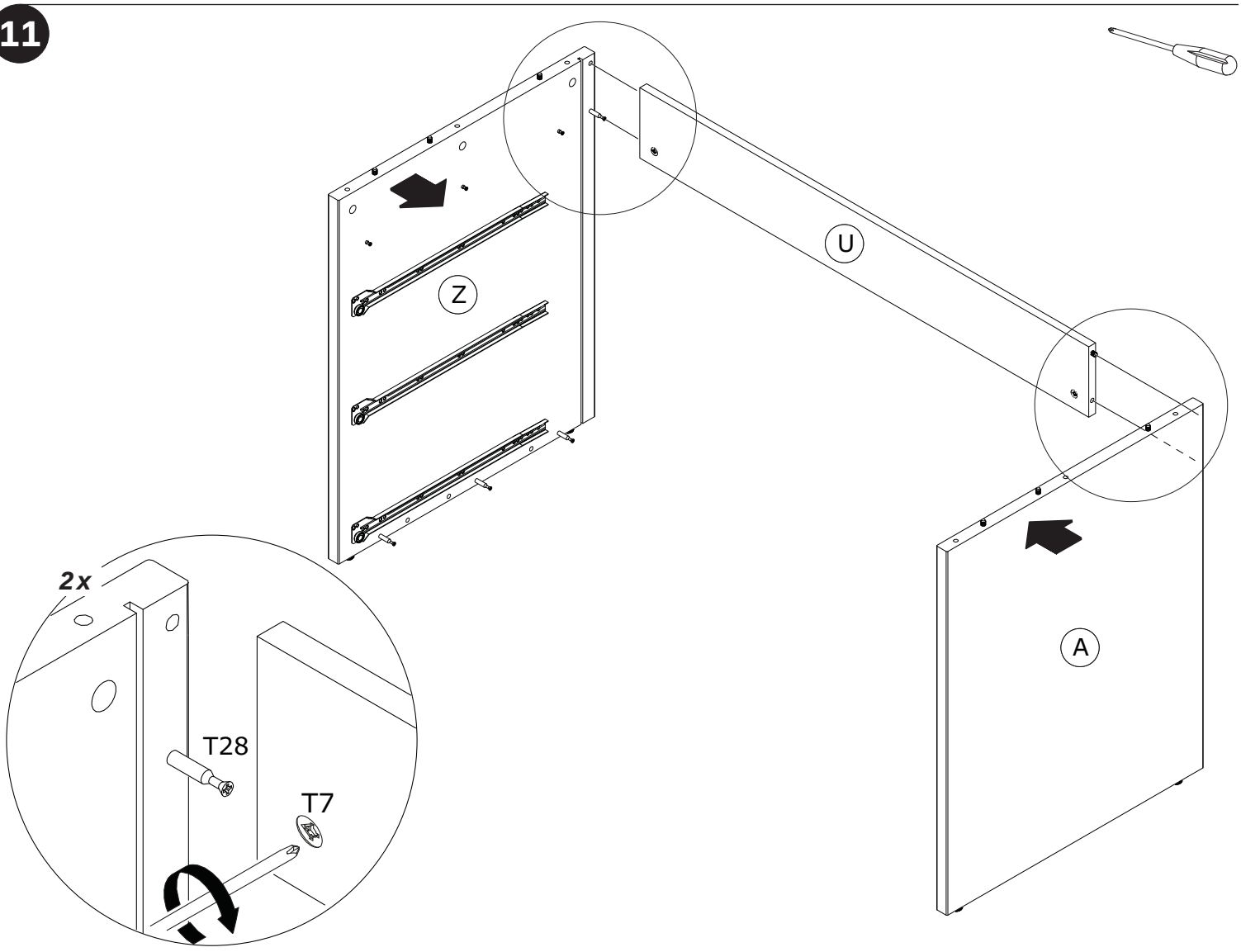

12

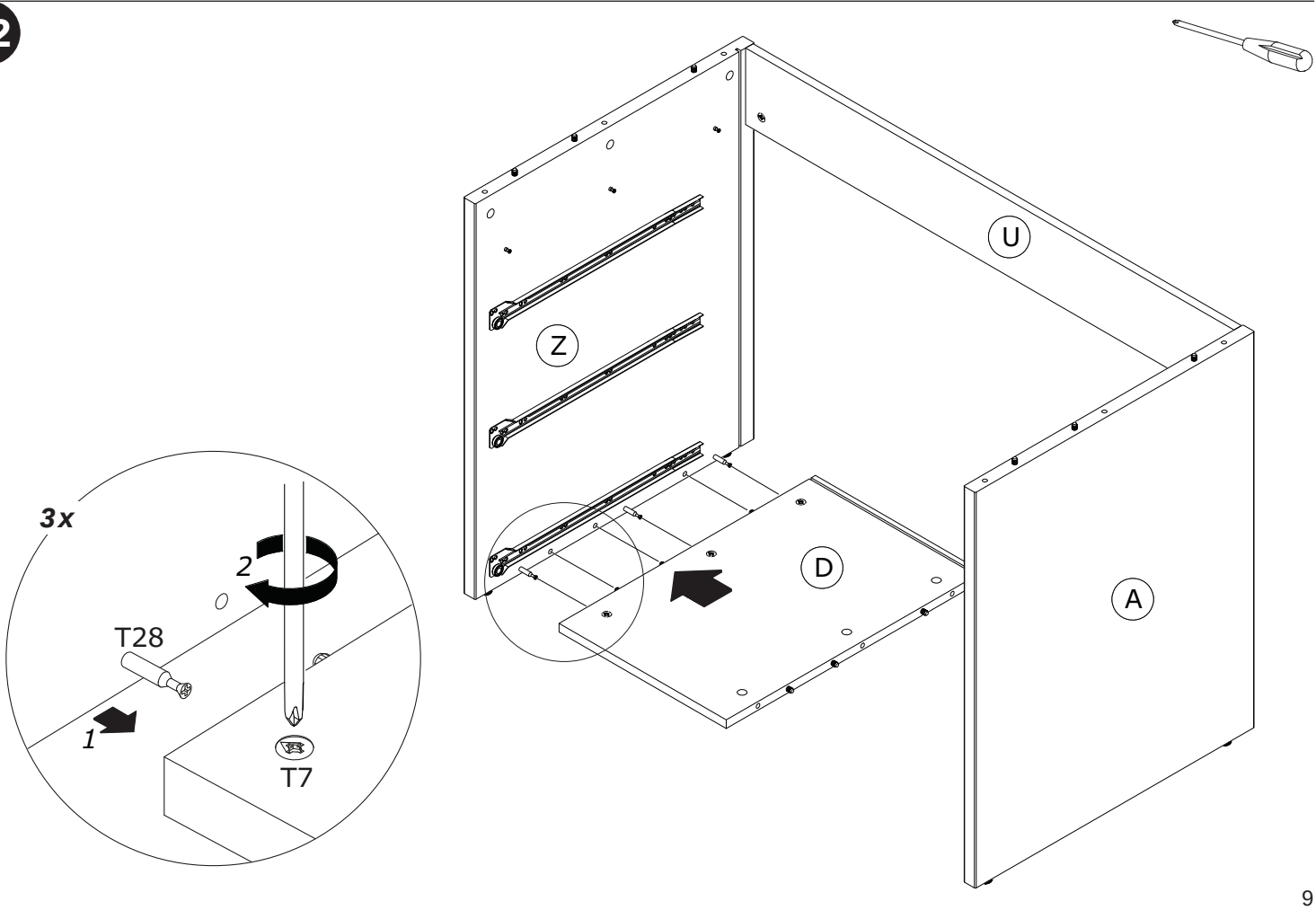

13

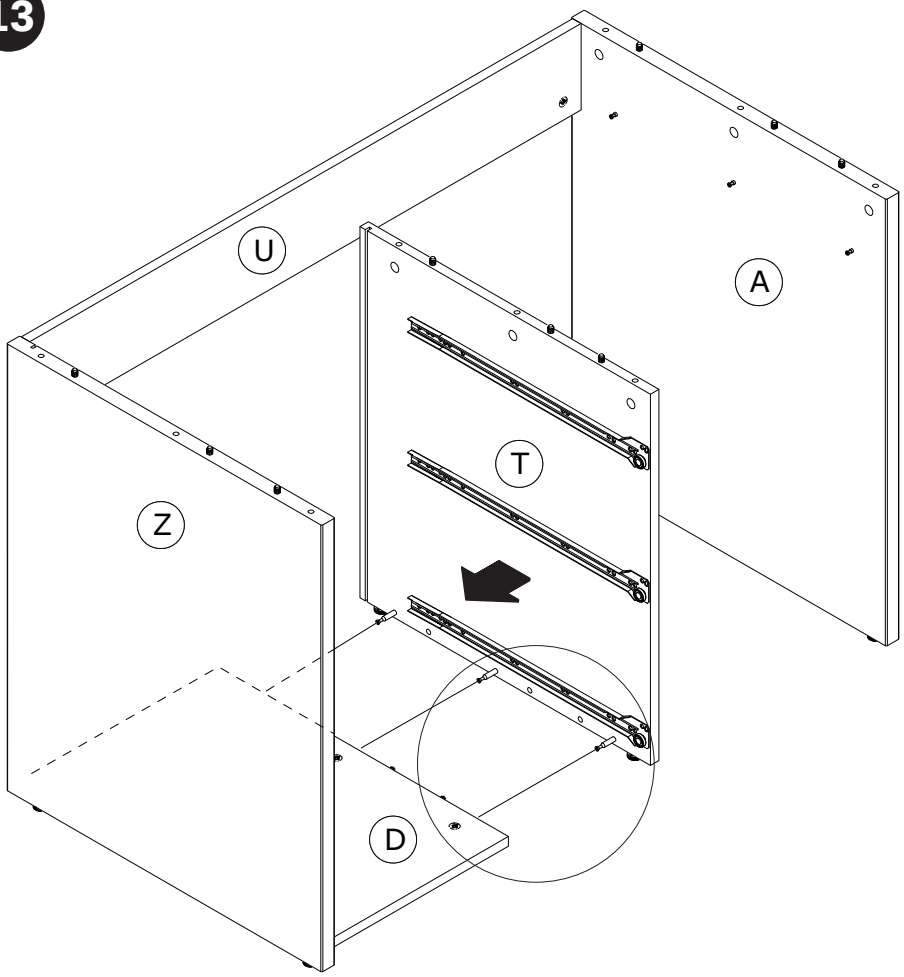

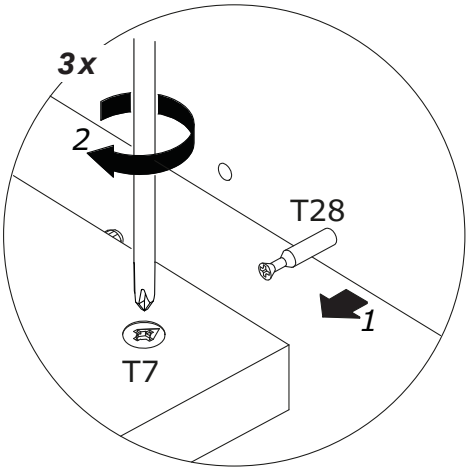

14

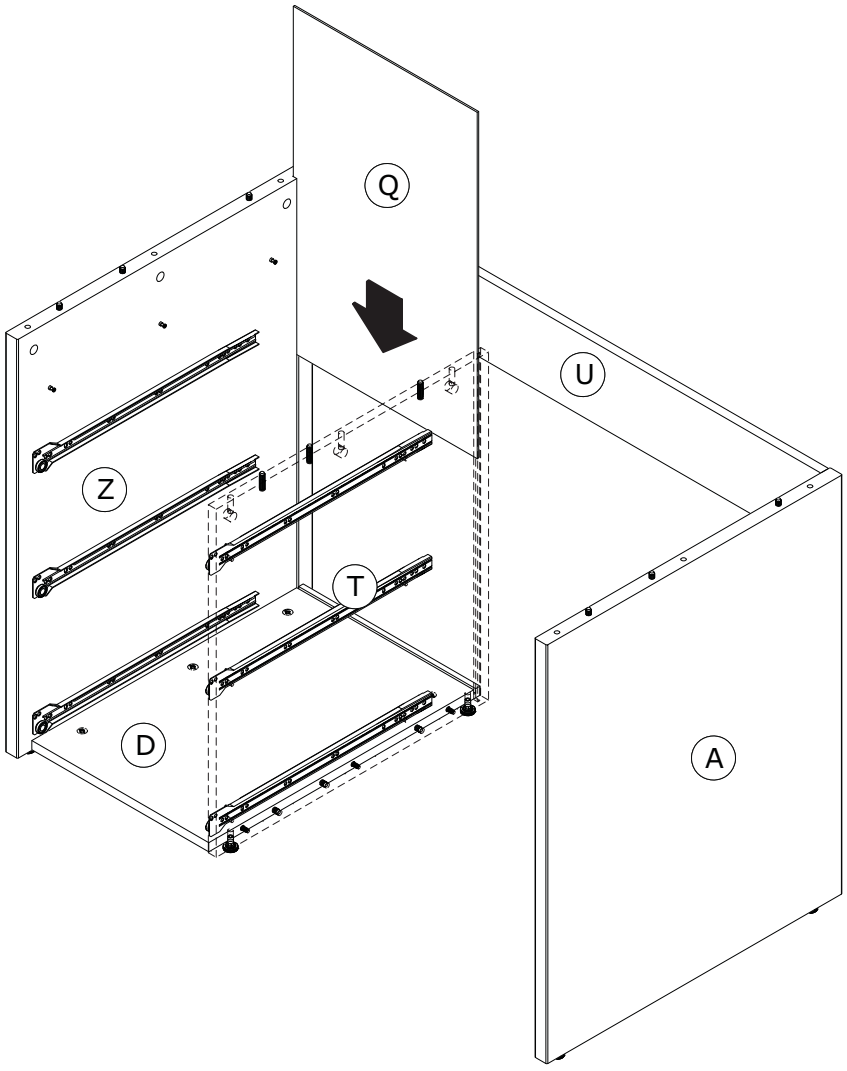

15

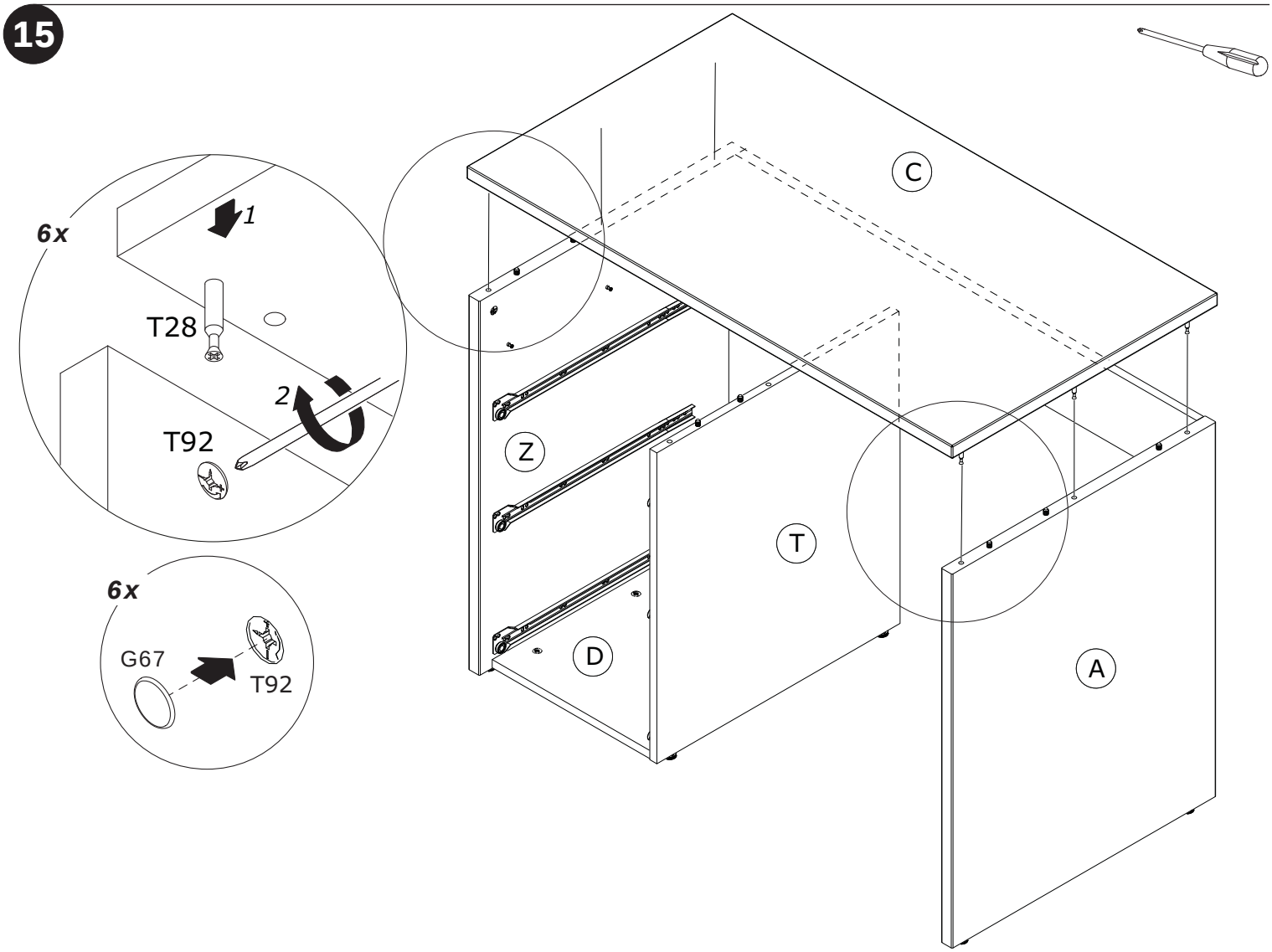

16

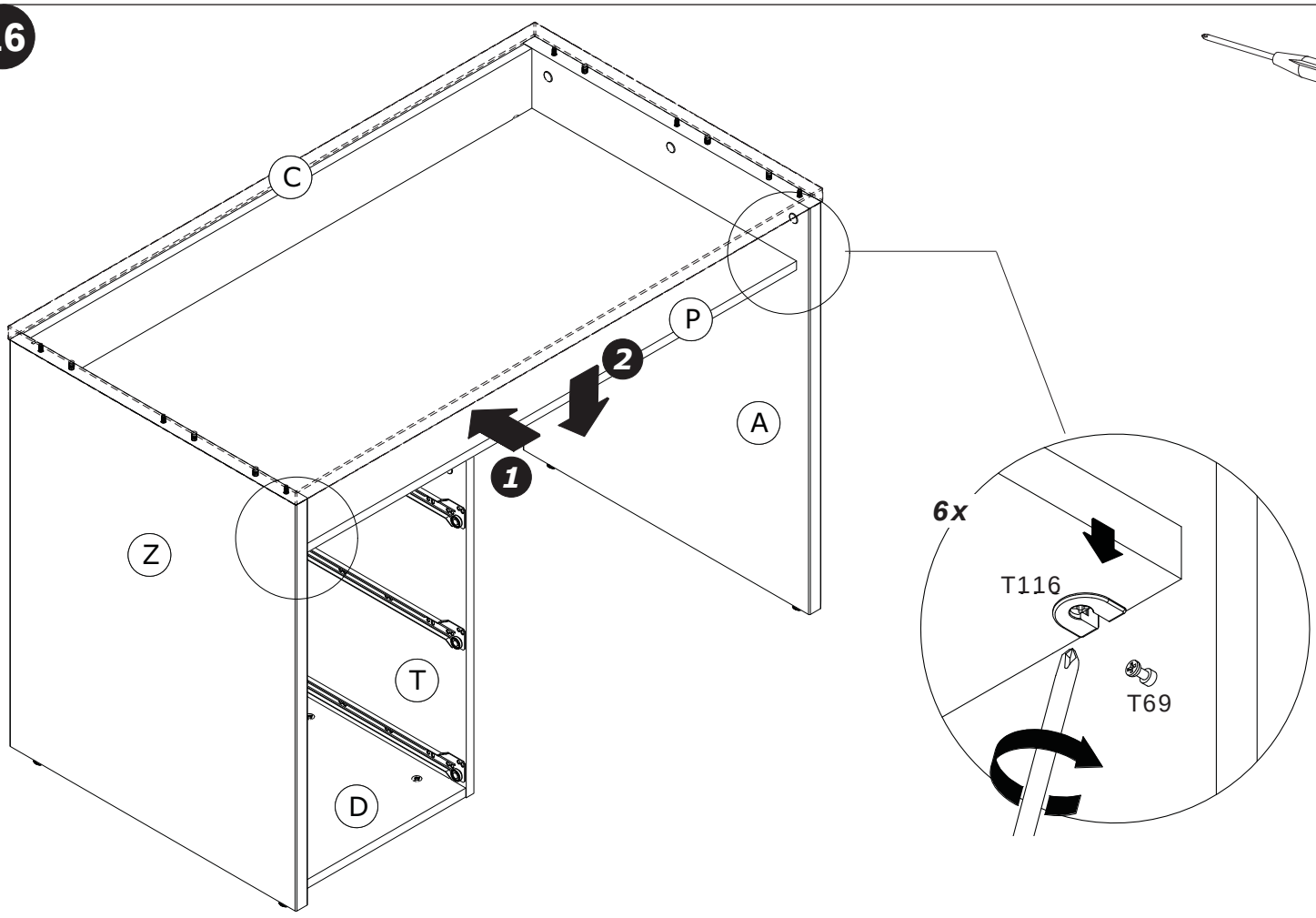

17

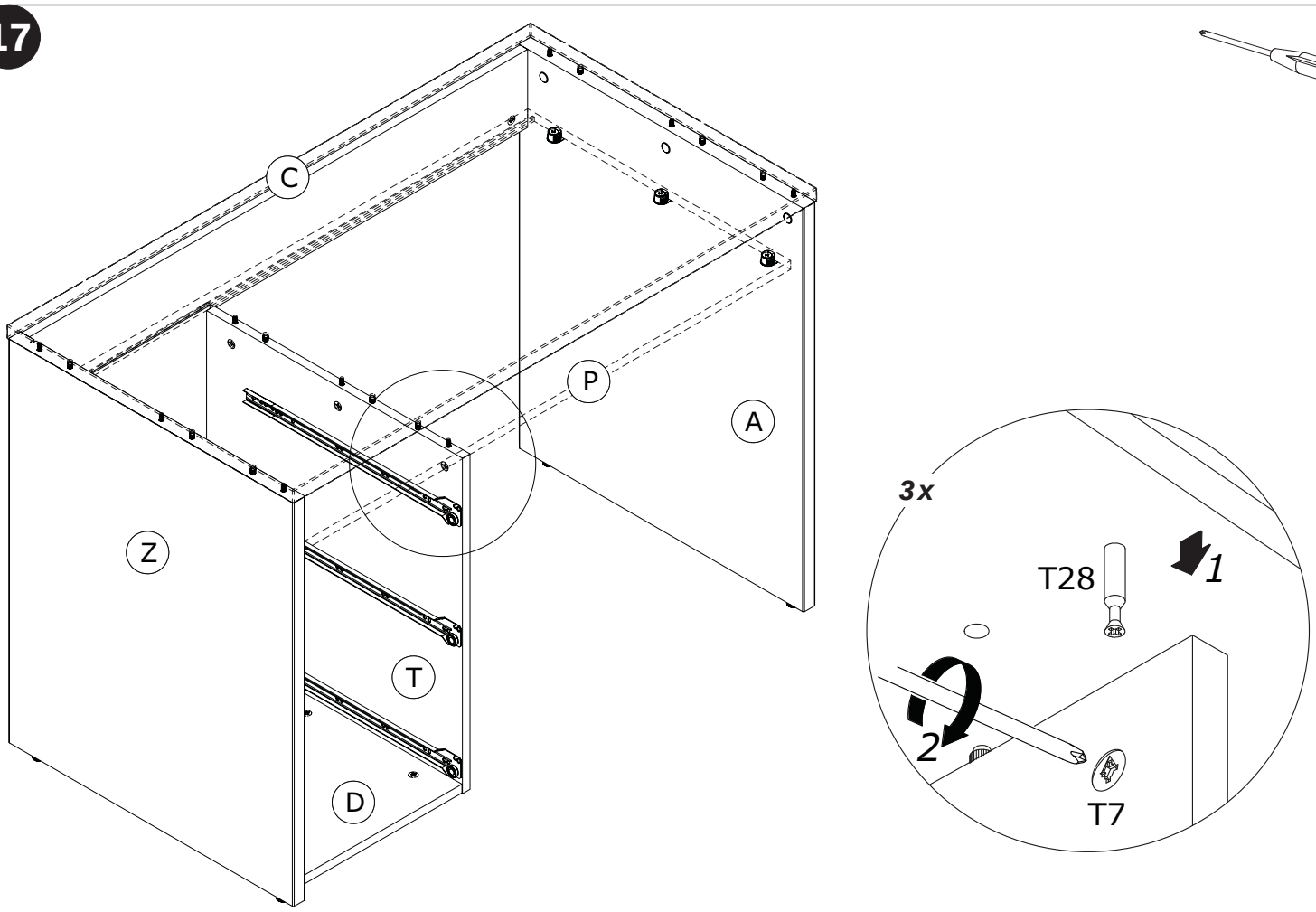

18

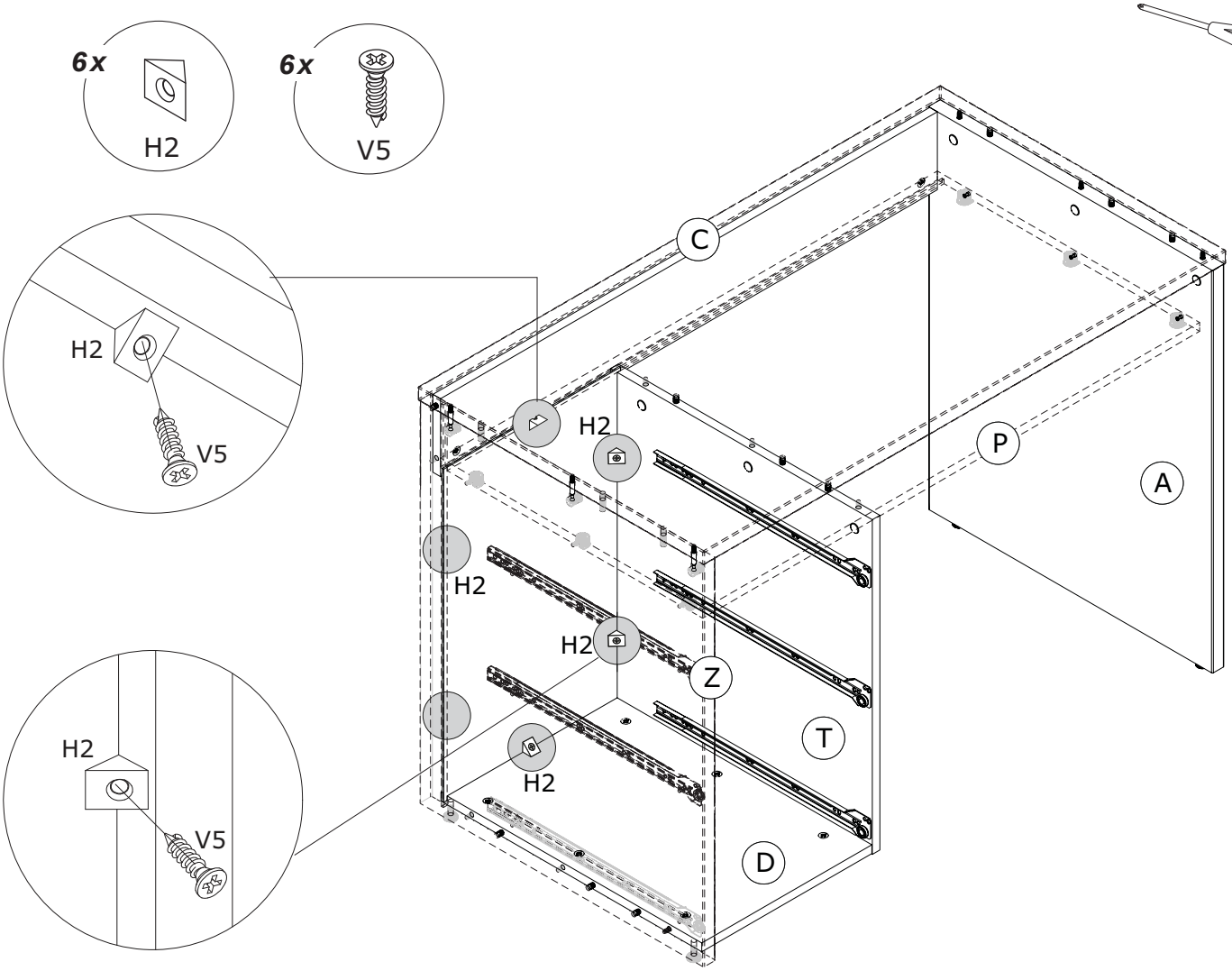
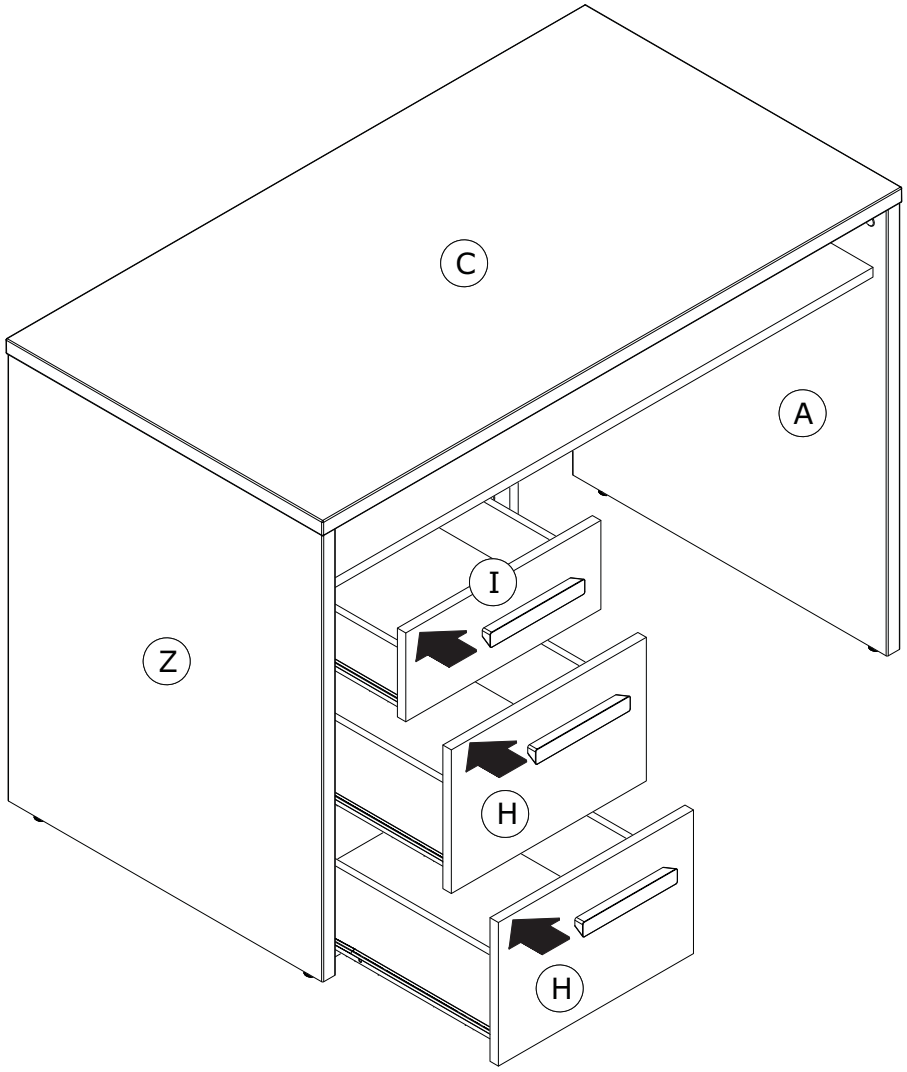
19