FALCAO S

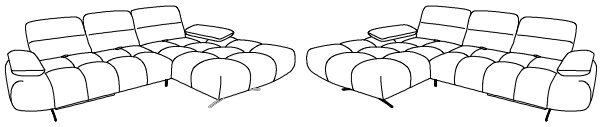

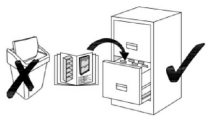

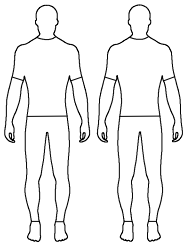

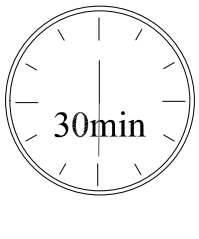

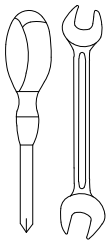

Teil	Pcs	Colli
1	1x	1/3
2	1x	2/3

L

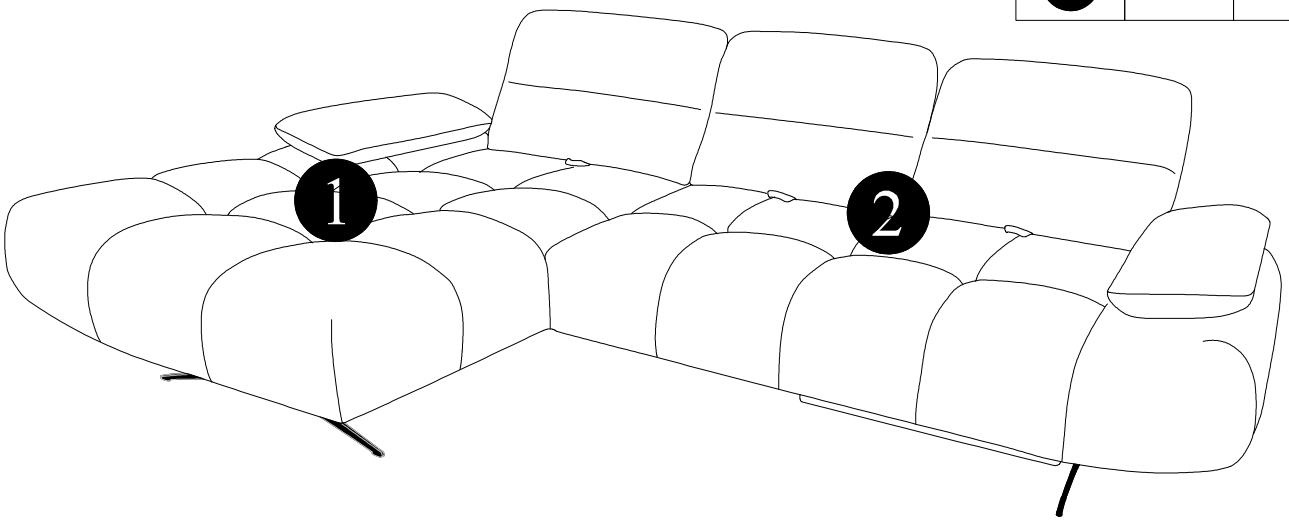

R

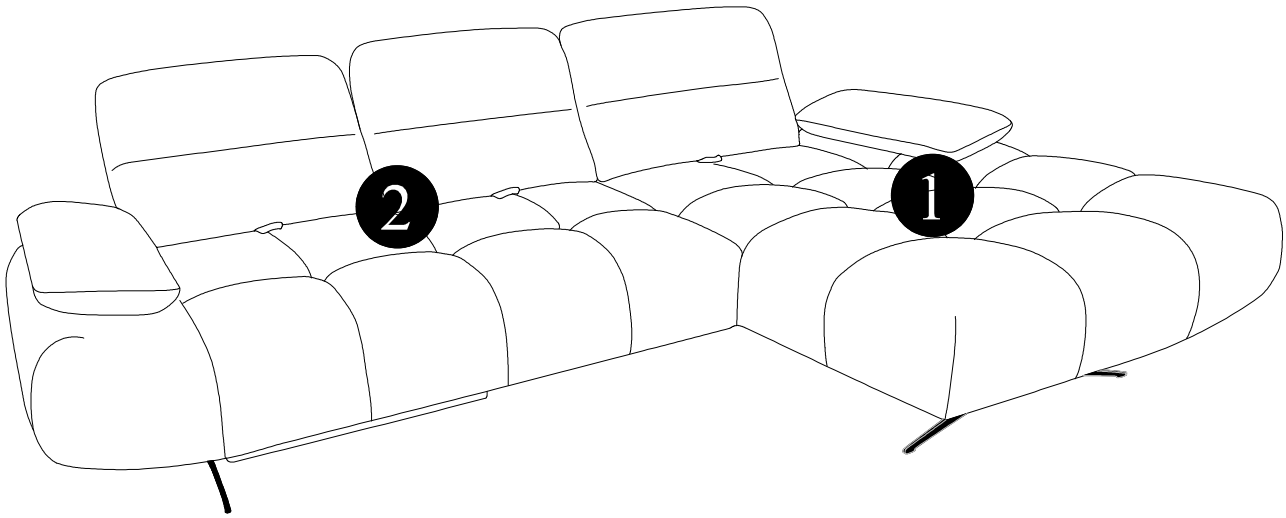

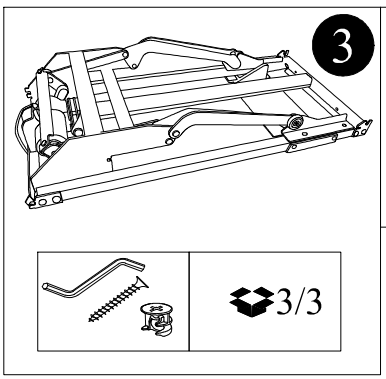

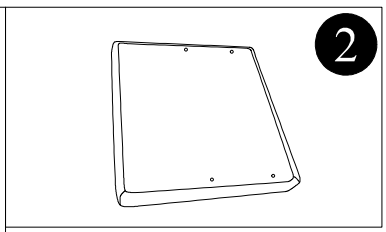



A	B	C	D	E	F	G
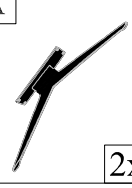 2x	 3x	 8x	 4x	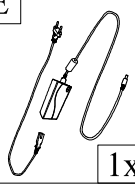 1x	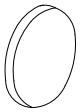 3x	 8x
H-800x170	H-170	M5/L40	M6/L20		ø 20	M6/L40

1

R

L

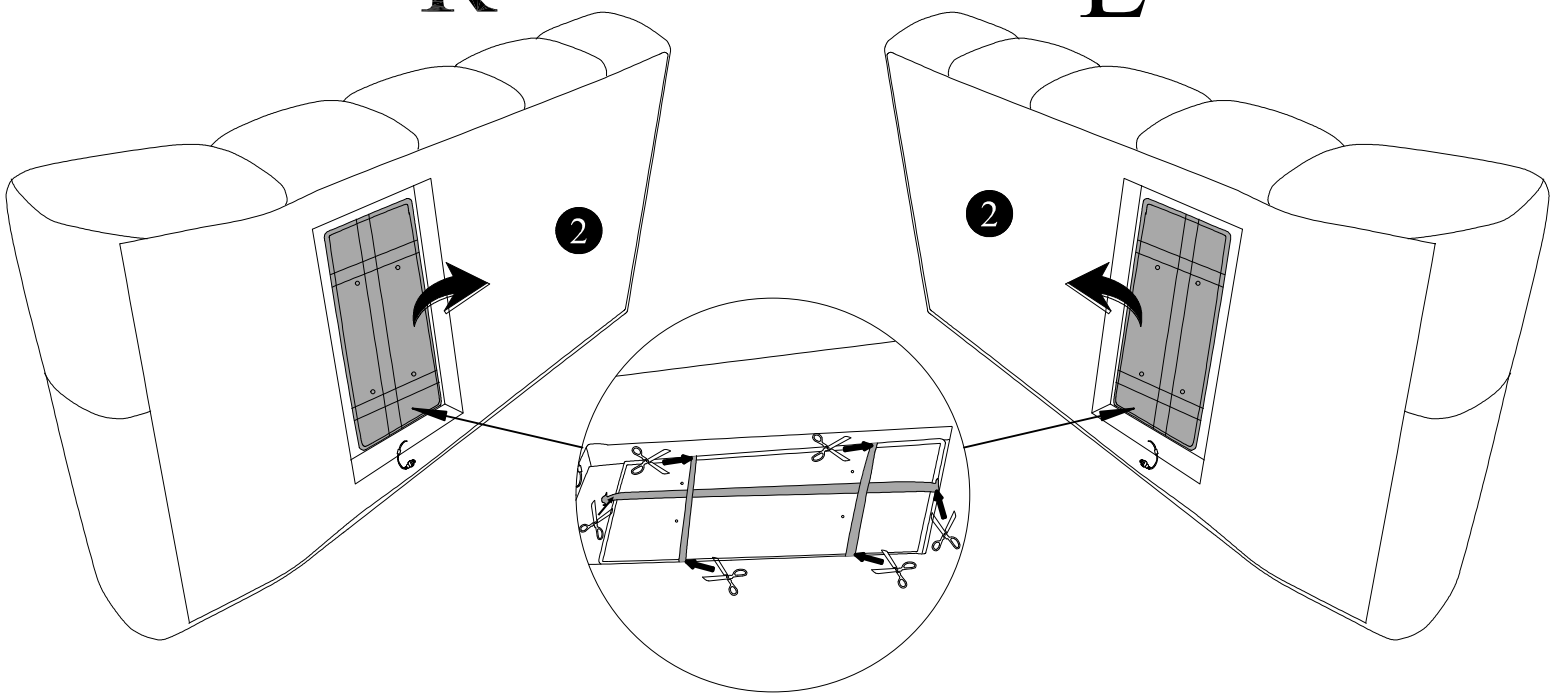

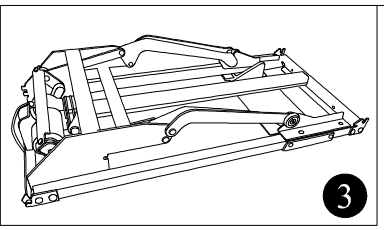

2

R

L

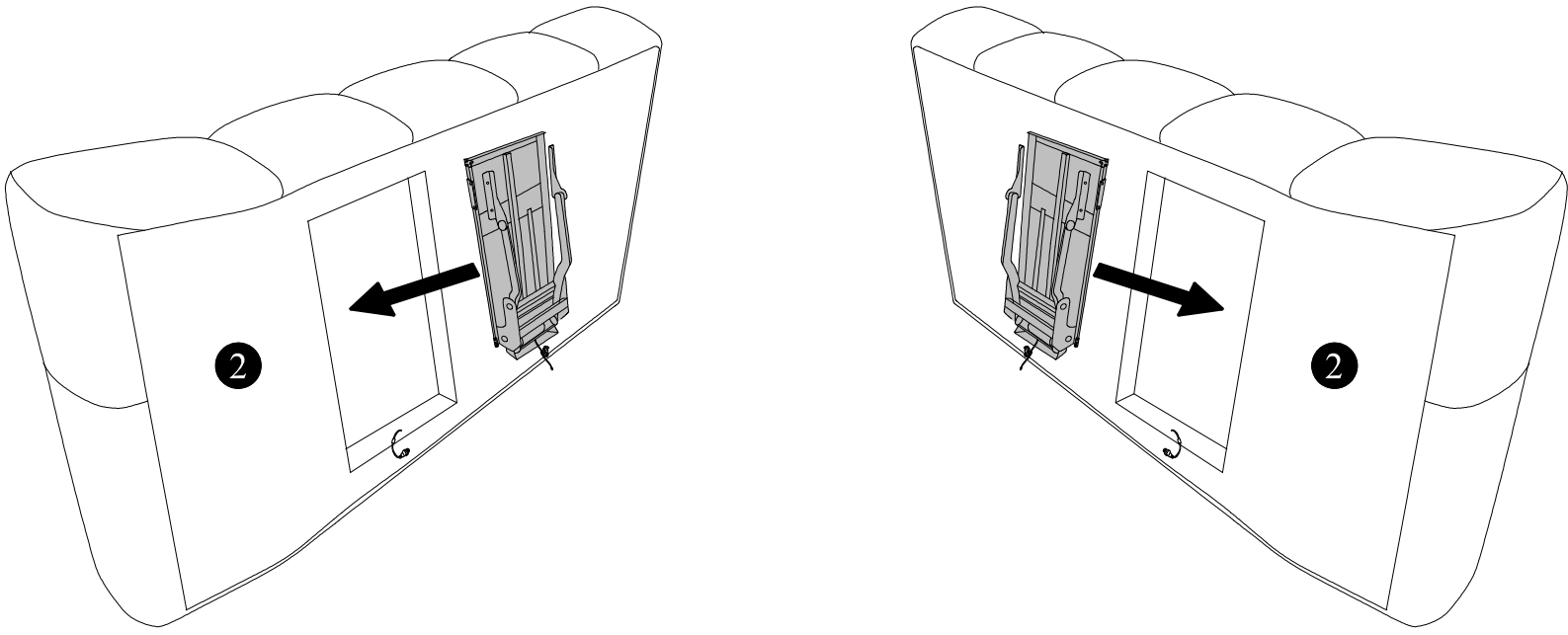

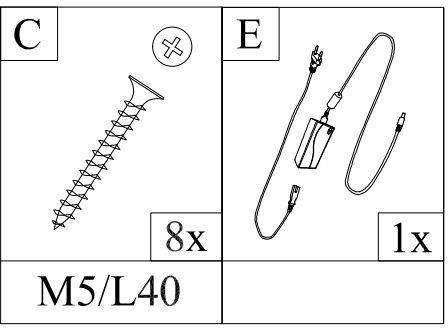

3

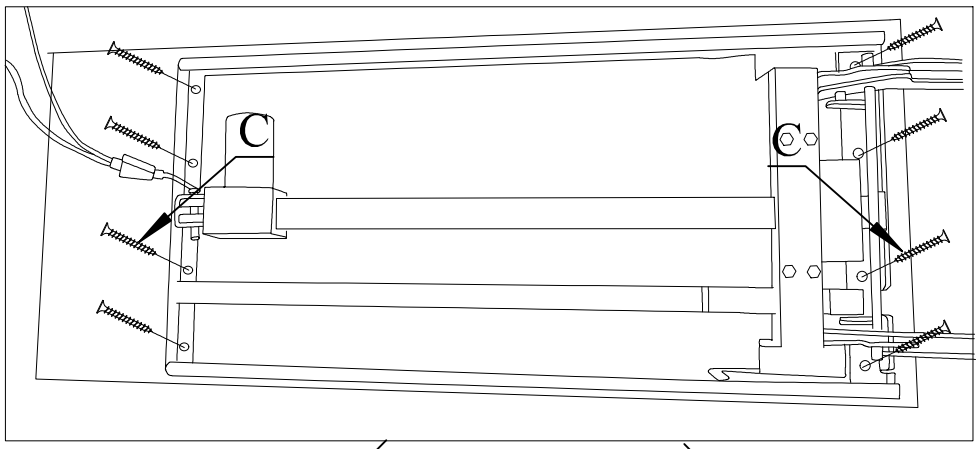

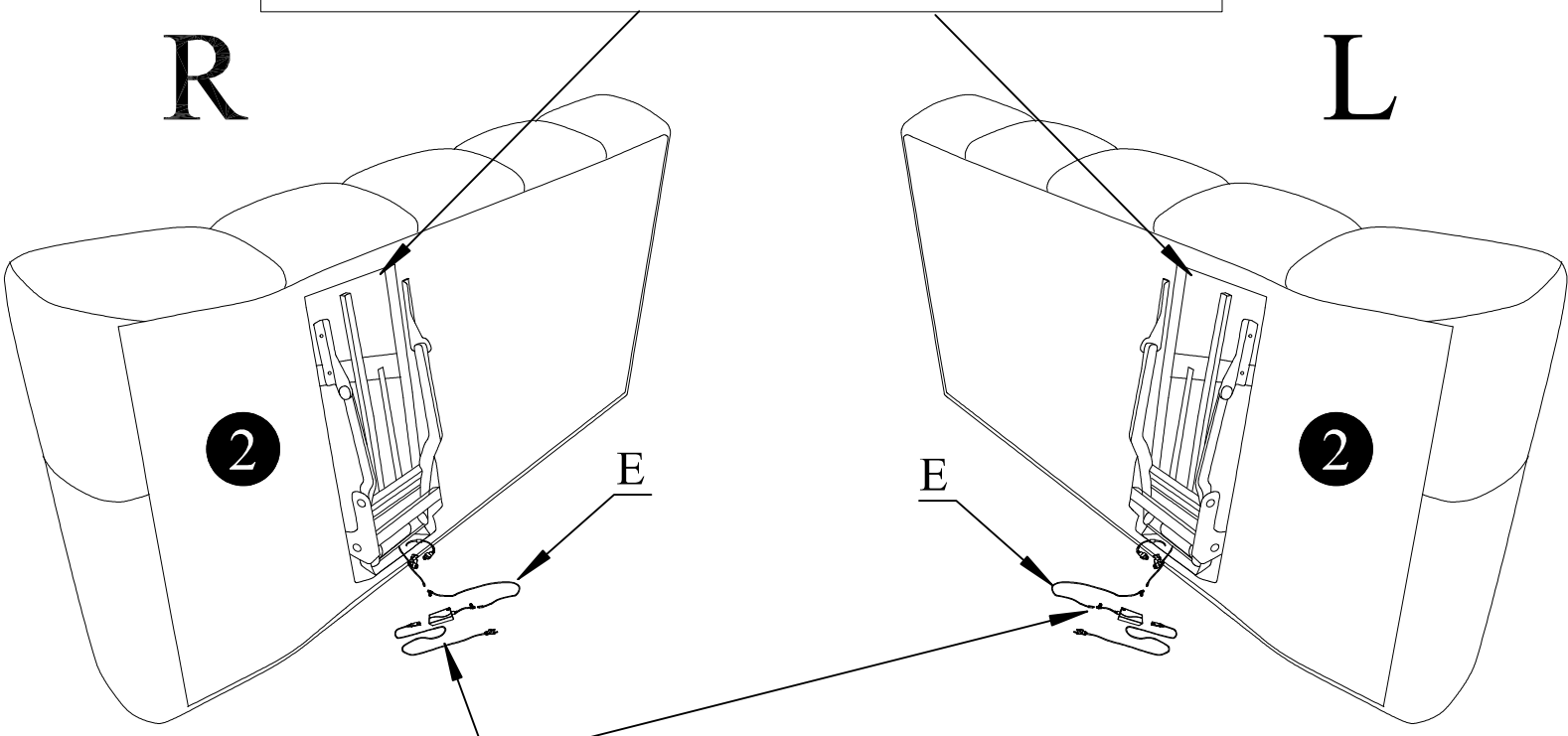

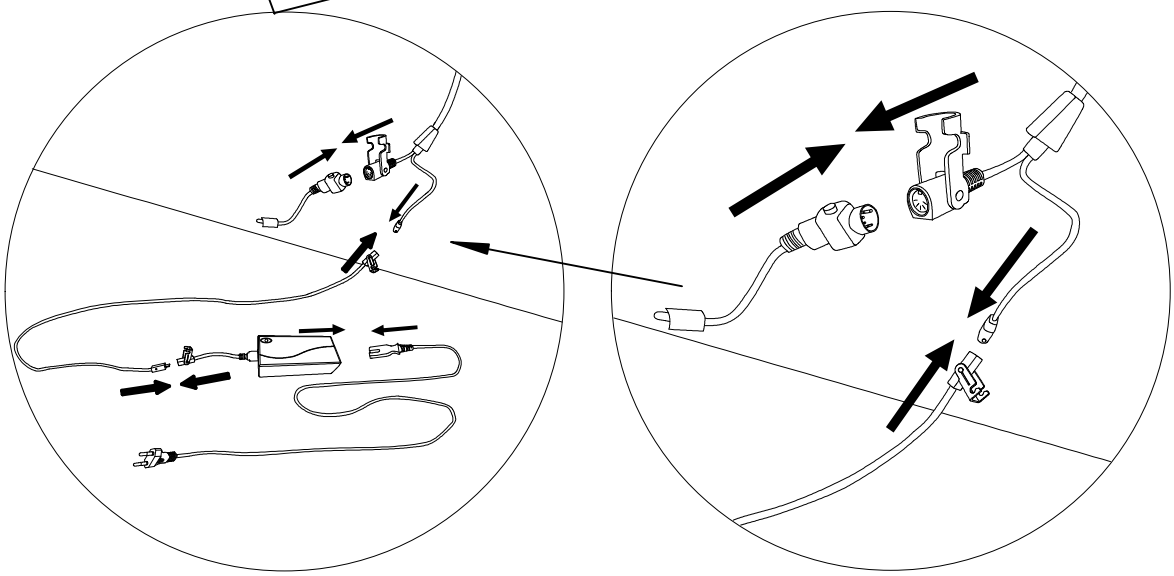

4

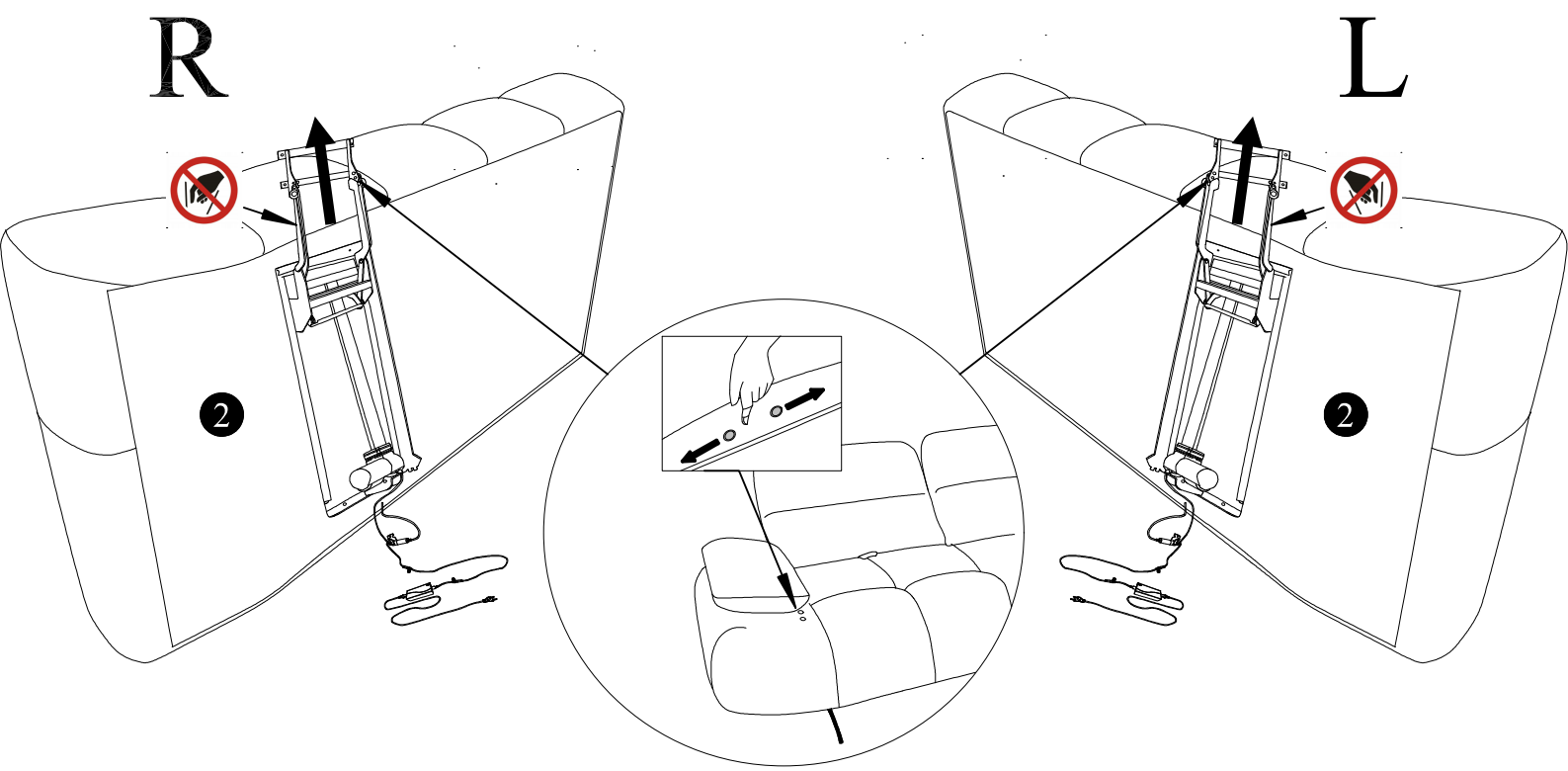

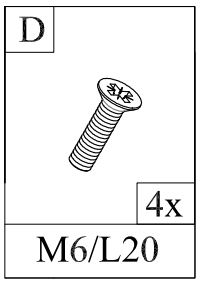

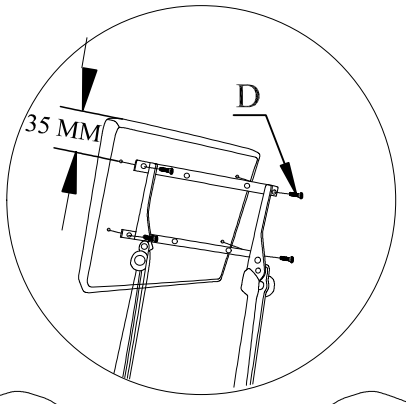

R

L

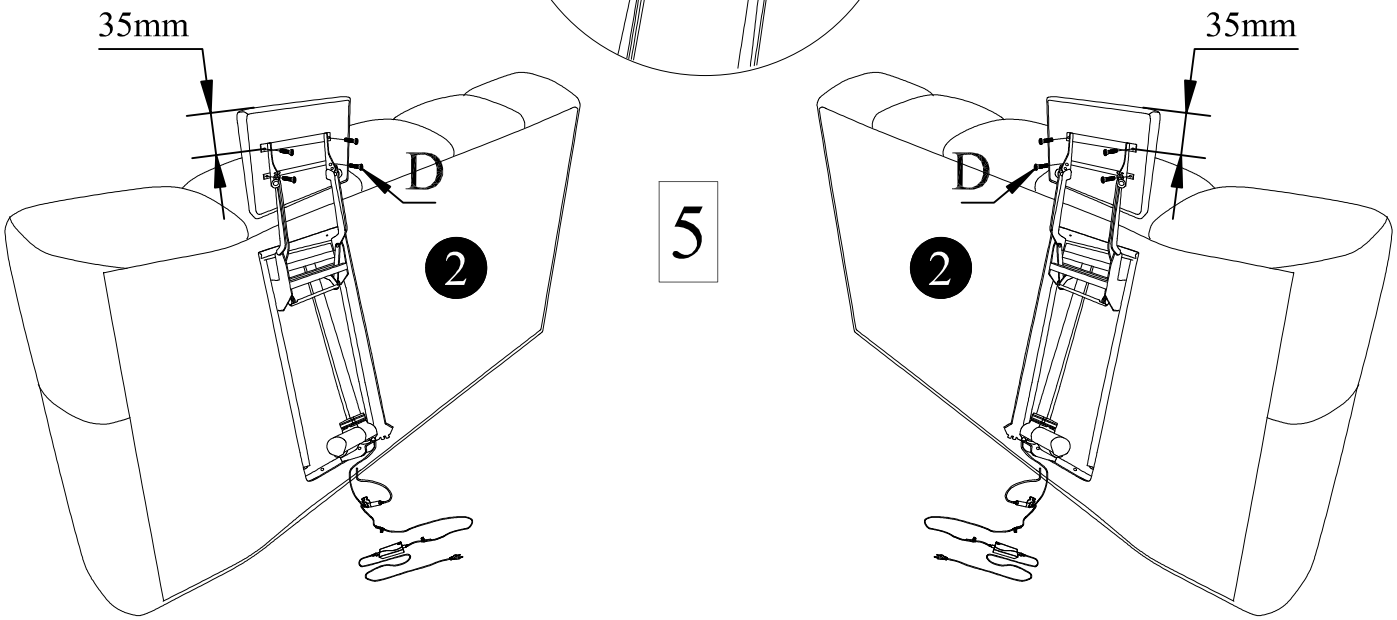

6

R

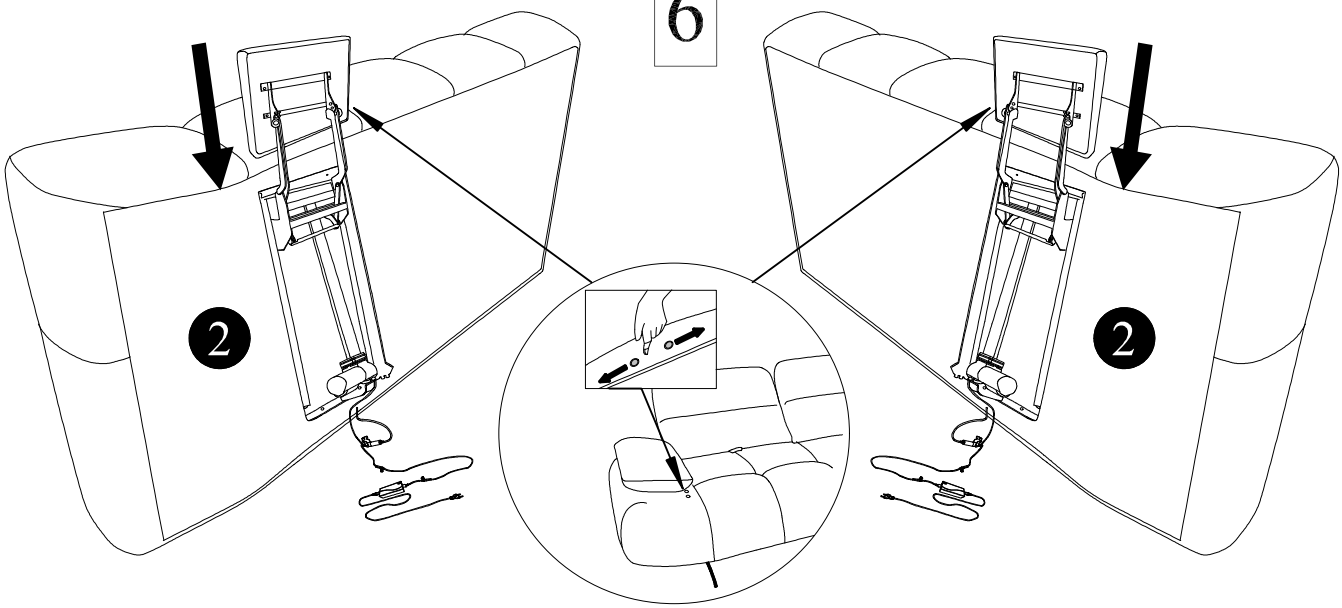

L

A	B	F	G
 1x	 3x	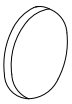 3x	 4x
H-800x170	H-170	ø 20	M6/40

R 7 L

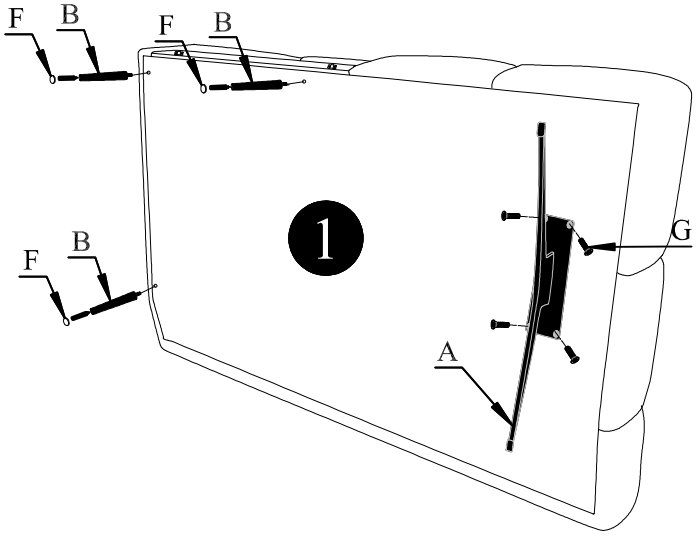

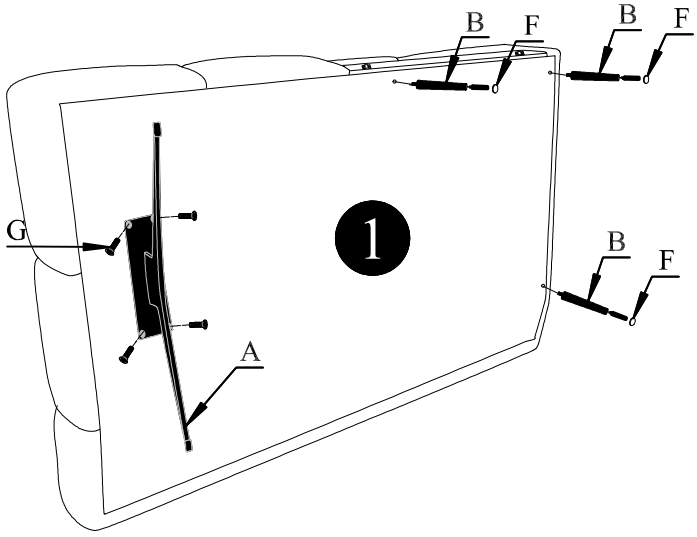

A	G
 1x	 4x
H-800x170	M6/40

8

R

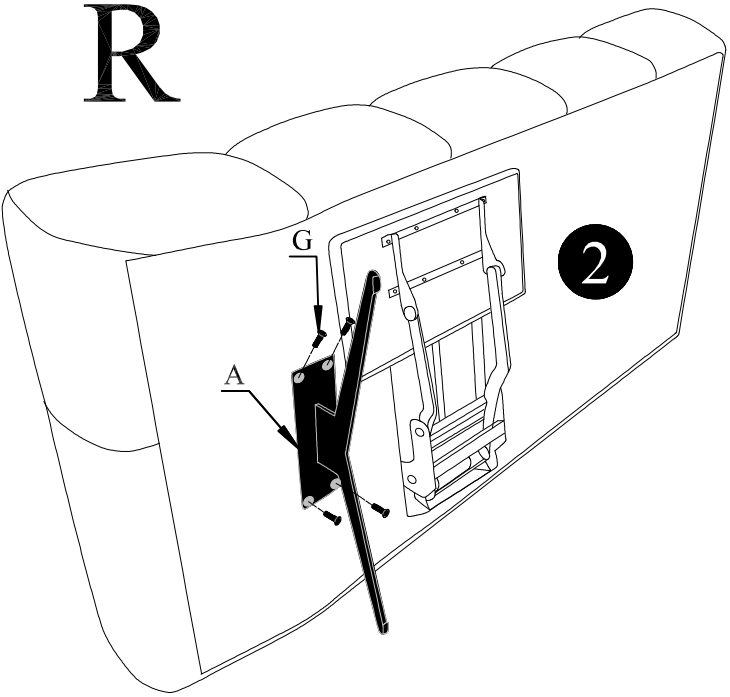

R

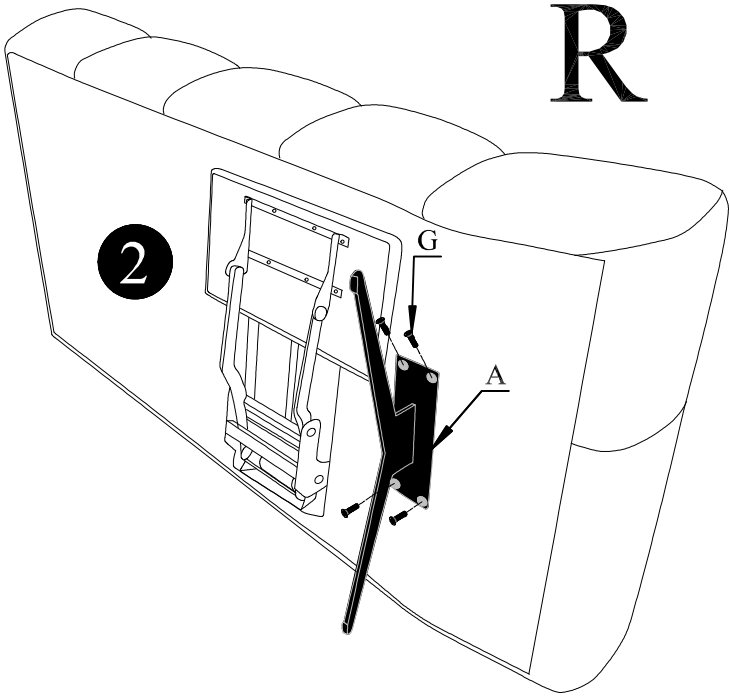

9

